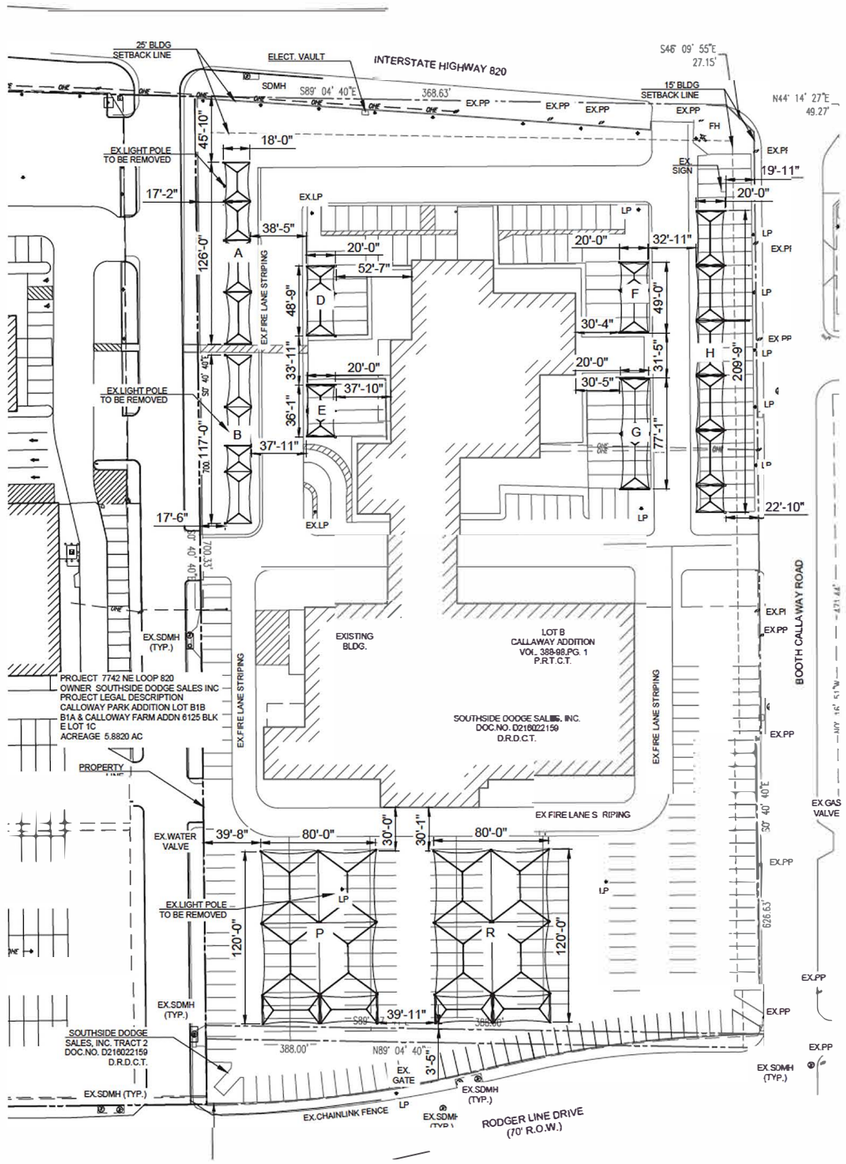

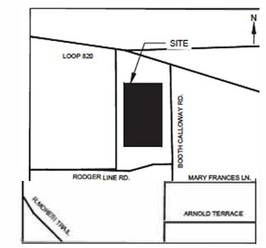

VICINITY MAP
N.T.S.

CODE ANALYSIS							
BUILDING	OCCUPANCY	CONSTRUCTION TYPE	AREA (SQF)	OCCUPANT LOAD	COLUMNS	TYPE OF HAIL NET	REFERENCE FOR COLUMN SUPPORT
A	S2	2-B	2268	N/A	5	SINGLE HERITAGE CANTILEVER	1001-1.0-3000
B	S2	2-B	2106	N/A	5	SINGLE HERITAGE CANTILEVER	1001-1.0-3000
D	S2	2-B	975	N/A	3	SINGLE HERITAGE CANTILEVER	1001-1.0-3000
E	S2	2-B	722	N/A	3	SINGLE HERITAGE CANTILEVER	1001-1.0-3000
F	S2	2-B	980	N/A	3	SINGLE HERITAGE CANTILEVER	1001-1.0-3000
G	S2	2-B	1542	N/A	3	SINGLE HERITAGE CANTILEVER	1001-1.0-3000
H	S2	2-B	4195	N/A	7	SINGLE HERITAGE CANTILEVER	1001-1.0-3000
P	S2	2-B	9600	N/A	9	CUSTOM PROTECTOR CANTILEVER	1001-2.0-3000
R	S2	2-B	9600	N/A	9	CUSTOM PROTECTOR CANTILEVER	1001-2.0-3000
TOTAL			31988		47		

NOTE: EXISTING LIGHT POLES TO BE REMOVED THAT ARE IN CONFLICT WITH PROPOSED HAIL NETS

N

SITE PLAN
SCALE 1:40 (ENGINEERING)
CASE SUP 2018-02

THESE PLANS AND SPECIFICATIONS ARE THE PROPERTY OF USA SHADE AND FABRIC STRUCTURES AND SHALL NOT BE REPRODUCED WITHOUT THEIR WRITTEN PERMISSION.

vps

CORPORATE HEADQUARTERS
8505-A CHANCELLOR ROW
DALLAS, TX, 75247
800-966-5005

CERTIFICATIONS
IAS CERTIFICATION No FA-428
CLARK COUNTY MANUFACTURER CERTIFICATION NUMBER (NEVADA) 355

CUSTOMER
AUTONATION INC.

PROJECT NAME
CDJR N.RICHLAND HILLS

LOCATION
NORTH RICHLAND H LLS TX

PROJECT NUMBER.
1001

STRUCTURE TYPE
HERITAGE CANTILEVERS & DIAMOND PROTECTORS

SIZE
VARIOUS

SCALE ENGINEERING

DRAWING IZE D

NC	RELEASE FOR FABRICATION	05/08/18	SA	JO	JO
REV					

Eng. By	JO	05/08/18
Design By	SA	05/08/18
Approved By	JO	05/08/18

DRAWING DESCRIPTION
SITE PLAN

DWG. 62998-1.6

PAGE 4000

REV. NC

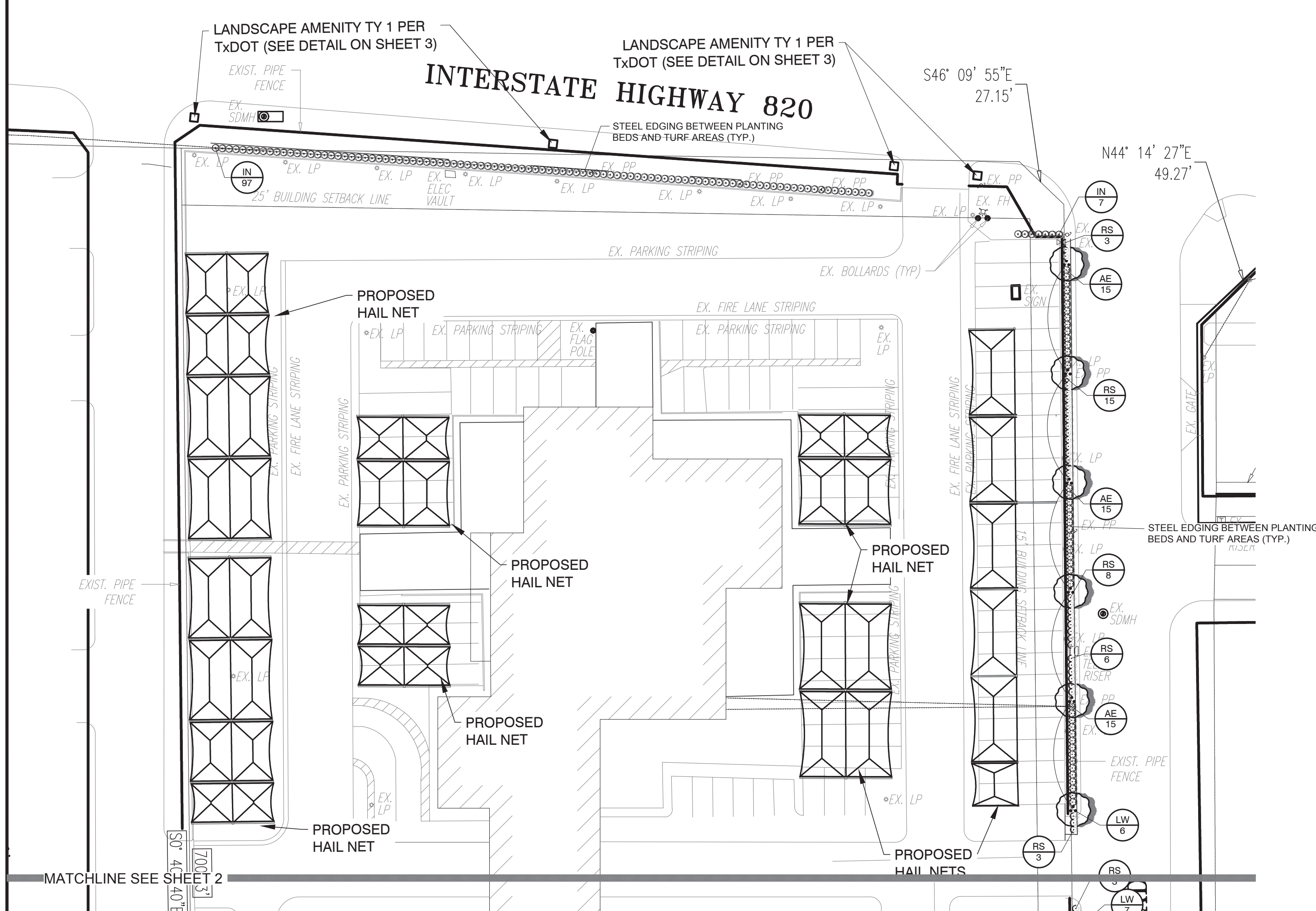

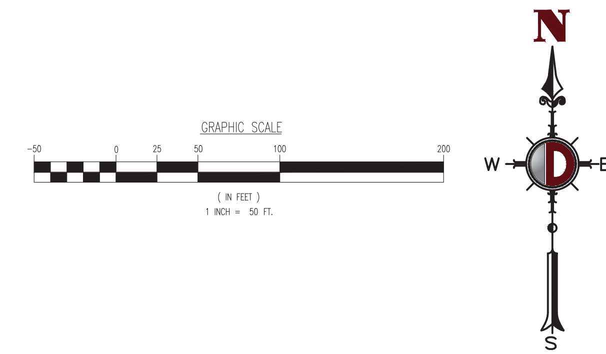

PLANT_SCHEDULE

TREES	CODE	BOTANICAL NAME / COMMON NAME	CONT	CAL	HEIGHT	QTY
	LW	Lagerstroemia indica `Watermelon Red` / Watermelon Red Crape Myrtle Multi trunk - 3-5 canes, 2" caliper overall.	30 gal	2"Cal	8`-10`	19

SHRUBS	CODE	BOTANICAL NAME / COMMON NAME	SIZE	SPACING	QTY
	AE	Abelia x grandiflora `Edward Goucher` / Glossy Abelia	3 gal	36" o.c.	95
	IN	Ilex vomitoria `Nana` / Dwarf Yaupon	3 gal	36" o.c.	104
	RS	Rhaphiolepis indica `Snow White` / Snow White Indian Hawthorn	5 gal	36" o.c.	82

GENERAL LANDSCAPE NOTES

1. THE GENERAL CONTRACTOR IS RESPONSIBLE FOR REMOVING ALL EXISTING VEGETATION (EXCEPT WHERE NOTED TO REMAIN). BEFORE STARTING WORK, THE LANDSCAPE CONTRACTOR SHALL VERIFY THAT THE GRADE OF ALL LANDSCAPE AREAS ARE WITHIN +/-0.1' OF FINISH GRADE. THE LANDSCAPE CONTRACTOR SHALL NOTIFY THE OWNER IMMEDIATELY SHOULD ANY DISCREPANCIES EXIST. SEE SPECIFICATIONS FOR MORE DETAILED INSTRUCTION ON TURF AREA AND PLANTING BED PREPARATION.
2. THE LANDSCAPE CONTRACTOR SHALL CONSTRUCT AND MAINTAIN FINISH GRADES AS SHOWN ON GRADING PLANS, AND CONSTRUCT AND MAINTAIN SLOPES AS RECOMMENDED BY THE GEOTECHNICAL REPORT. ALL LANDSCAPE AREAS SHALL HAVE POSITIVE DRAINAGE AWAY FROM STRUCTURES AT THE MINIMUM SLOPE SPECIFIED IN THE REPORT, AND AREAS OF POTENTIAL PONDING SHALL BE REGRADED TO BLEND IN WITH THE SURROUNDING GRADES AND ELIMINATE PONDING POTENTIAL. SHOULD ANY CONFLICTS AND/OR DISCREPANCIES ARISE BETWEEN THE GRADING PLANS, GEOTECHNICAL REPORT, THESE NOTES, AND ACTUAL CONDITIONS, THE CONTRACTOR SHALL IMMEDIATELY BRING SUCH ITEMS TO THE ATTENTION OF THE LANDSCAPE ARCHITECT AND OWNER.
3. CONTRACTOR SHALL ENSURE THAT THE GRADE IN SOD AREAS SHALL BE 1" BELOW FINISH GRADE BEFORE INSTALLING SOIL AMENDMENTS, AND 2" BELOW FINISH GRADE IN SHRUB AREAS BEFORE INSTALLING SOIL AMENDMENTS. MULCH COVER WITHIN 6" OF CONCRETE WALKS AND CURBS SHALL NOT PROTRUDE ABOVE THE FINISH SURFACE OF THE WALKS AND CURBS. MULCH COVER WITHIN 12" OF WALLS SHALL BE AT LEAST 3" LOWER THAN THE TOP OF WALL.
4. INSTALL 5 OUNCE, WOVEN, NEEDLE-PUNCHED POLYPROPYLENE FABRIC UNDER ALL MULCHED AREAS AND INDIVIDUAL TREE RINGS.
5. INSTALL 3" THICK LAYER OF "RARE RED ROCK #1" GRAVEL MULCH TOPDRESSING, AS AVAILABLE FROM FULLER 5 LANDSCAPE SUPPLY, CUSSETA, ALABAMA, (888) 749-2880, IN ALL PLANTING BEDS.
6. INSTALL 14G, GREEN STEEL EDGING BETWEEN ALL PLANTING BEDS AND TURF AREAS, AND BETWEEN GROUNDCOVERS AND OTHER PLANTS (WHERE INDICATED ON THE PLAN).
7. HYDROMULCH ALL DISTURBED AREAS OUTSIDE OF PROPERTY LIMITS (UNLESS SHOWN AS SOD).
8. ALL PLANT LOCATIONS ARE DIAGRAMMATIC. ACTUAL LOCATIONS SHALL BE VERIFIED WITH THE LANDSCAPE ARCHITECT OR DESIGNER PRIOR TO PLANTING. THE LANDSCAPE CONTRACTOR SHALL ENSURE THAT ALL REQUIREMENTS OF THE PERMITTING AUTHORITY ARE MET (I.E., MINIMUM PLANT QUANTITIES, PLANTING METHODS, TREE PROTECTION METHODS, ETC.).
9. THE LANDSCAPE CONTRACTOR IS RESPONSIBLE FOR DETERMINING PLANT QUANTITIES; PLANT QUANTITIES SHOWN ON LEGENDS AND CALLOUTS ARE FOR GENERAL INFORMATION ONLY. IN THE EVENT OF A DISCREPANCY BETWEEN THE PLAN AND THE PLANT LEGEND, THE PLANT QUANTITY AS SHOWN ON THE PLAN (FOR INDIVIDUAL SYMBOLS) OR CALLOUT (FOR GROUNDCOVER PATTERNS) SHALL TAKE PRECEDENCE.
10. NO SUBSTITUTIONS OF PLANT MATERIALS SHALL BE ALLOWED. IF SOME OF THE PLANTS ARE NOT AVAILABLE, THE LANDSCAPE CONTRACTOR SHALL NOTIFY THE LANDSCAPE DESIGNER IN WRITING (VIA PROPER CHANNELS).
11. PLANTS MAY BE INSPECTED AND APPROVED OR REJECTED ON THE JOBSITE BY THE OWNER OR OWNER'S REPRESENTATIVE.
12. THE LANDSCAPE CONTRACTOR SHALL BE RESPONSIBLE FOR THE MAINTENANCE OF ALL WORK SHOWN ON THESE PLANS FOR 90 DAYS BEYOND FINAL ACCEPTANCE OF ALL LANDSCAPE WORK BY THE OWNER. LANDSCAPE MAINTENANCE SHALL INCLUDE WEEKLY SITE VISITS FOR THE FOLLOWING ACTIONS (AS APPROPRIATE): PROPER PRUNING, RESTAKING OF TREES, RESETTING OF PLANTS THAT HAVE SETTLED, MOWING AND AERATION OF LAWNS, WEEDING, RESEEDING AREAS WHICH HAVE NOT GERMINATED WELL, TREATING FOR INSECTS AND DISEASES,REPLACEMENT OF MULCH, REMOVAL OF LITTER, REPAIRS TO THE IRRIGATION SYSTEM DUE TO FAULTY PARTS AND/OR WORKMANSHIP, AND THE APPROPRIATE WATERING OF ALL PLANTINGS. THE LANDSCAPE CONTRACTOR SHALL MAINTAIN THE IRRIGATION SYSTEM IN PROPER WORKING ORDER, WITH SCHEDULING ADJUSTMENTS BY SEASON TO MAXIMIZE WATER CONSERVATION.
13. SHOULD SEEDED AND/OR SODDED AREAS NOT BE COVERED BY AN AUTOMATIC IRRIGATION SYSTEM, THE LANDSCAPE CONTRACTOR SHAL BE RESPONSIBLE FOR WATERING THESE AREAS AND OBTAINING A FULL STAND OF GRASS AT NO ADDITIONAL COST TO THE OWNER.
14. TO ACHIEVE FINAL ACCEPTANCE AT THE END OF THE MAINTENANCE PERIOD, ALL OF THE FOLLOWING CONDITIONS MUST OCCUR:
    A. THE LANDSCAPE SHALL SHOW ACTIVE, HEALTHY GROWTH (WITH EXCEPTIONS MADE FOR SEASONAL DORMANCY). ALL PLANTS NOT MEETING THIS CONDITION SHALL BE REJECTED AND REPLACED BY HEALTHY PLANT MATERIAL PRIOR TO FINAL ACCEPTANCE.
    B. ALL HARDSCAPE SHALL BE CLEANED PRIOR TO FINAL ACCEPTANCE.
    C. SODDED AREAS MUST BE ACTIVELY GROWING AND MUST REACH A MINIMUM HEIGHT OF 1 1/2 INCHES BEFORE FIRST MOWING. HYDROMULCHED AREAS SHALL SHOW ACTIVE, HEALTHY GROWTH. BARE AREAS LARGER THAN TWELVE SQUARE INCHES MUST BE RESODDED OR RESEEDED (AS APPROPRIATE) PRIOR TO FINAL ACCEPTANCE. ALL SODDED TURF SHALL BE NEATLY MOWED.
15. SEE SPECIFICATIONS AND DETAILS FOR FURTHER REQUIREMENTS.

ROOT BARRIERS

THE CONTRACTOR SHALL INSTALL ROOT BARRIERS NEAR ALL NEWLY-PLANTED TREES THAT ARE LOCATED WITHIN FIVE (5) FEET OF PAVING OR CURBS. ROOT BARRIERS SHALL BE "CENTURY" OR "DEEP-ROOT" 24" DEEP PANELS (OR EQUAL). BARRIERS SHALL BE LOCATED IMMEDIATELY ADJACENT TO HARDSCAPE. INSTALL PANELS PER MANUFACTURER'S RECOMMENDATIONS. UNDER NO CIRCUMSTANCES SHALL THE CONTRACTOR USE ROOT BARRIERS OF A TYPE THAT COMPLETELY ENCIRCLE THE ROOTBALL.

MULCHES

AFTER ALL PLANTING IS COMPLETE, CONTRACTOR SHALL INSTALL 4" THICK LAYER OF "RARE RED ROCK #1" GRAVEL MULCH TOPDRESSING, AS AVAILABLE FROM FULLER 5 LANDSCAPE SUPPLY, CUSSETA, ALABAMA, (888) 749-2880 (OR EQUAL), OVER LANDSCAPE FABRIC IN ALL PLANTING AREAS. CONTRACTOR SHALL SUBMIT SAMPLES OF ALL MULCHES TO LANDSCAPE ARCHITECT AND OWNER FOR APPROVAL PRIOR TO CONSTRUCTION. ABSOLUTELY NO EXPOSED GROUND SHALL BE LEFT SHOWING ANYWHERE ON THE PROJECT AFTER MULCH HAS BEEN INSTALLED.

LANDSCAPE CALCULATIONS CDJR

TOTAL SITE AREA:	257,691 SF
LANDSCAPE AREA REQUIRED:	38,653 SF (15% OF SITE AREA)
LANDSCAPE AREA PROVIDED:	7,704 SF (2.9% OF SITE AREA)
LANDSCAPE SETBACK	
15' LANDSCAPE SETBACK REQUIRED ADJACENT TO ROW	
NE LOOP 820	17'-1' SETBACK PROVIDED
RODGER LINE RD	0' SETBACK PROVIDED
BOOTH CALLAWAY RD	0' SETBACK PROVIDED
REQUIRED TREES IN SETBACK	
NE LOOP 820 387 FEET / 50 = 7.74 =8 TREES REQUIRED	8 TREES PROVIDED
RODGER LINE RD 388 FEET / 50 = 7.76 =8 TREES REQUIRED	0 TREES PROVIDED
BOOTH CALLAWAY RD 636 FEET / 50 = 12.7 =13 TREES REQUIRED	13 TREES PROVIDED
REQUIRED SHRUBS IN SETBACK	
NE LOOP 820 387 FEET / 50 x 10 = 77 SHRUBS REQUIRED	138 SHRUBS PROVIDED
RODGER LINE RD 388 FEET / 50 x 10 = 77 SHRUBS REQUIRED	0 SHRUBS PROVIDED
BOOTH CALLAWAY RD 636 FEET / 50 x 10 = 127 SHRUBS REQUIRED	179 SHRUBS PROVIDED
PARKING LOT SCREENING	
PARKING LOTS SHALL BE SCREENED WITH EVERGREEN SHRUBS PLACED AT 3 FEET O.C.	
NE LOOP 820	PROVIDED
RODGER LINE RD	NOT PROVIDED
BOOTH CALLAWAY RD	PROVIDED
PARKING LOT LANDSCAPING	
PARKING LOTS SHALL HAVE 5% LANDSCAPED AREA	NOT PROVIDED
ONE LARGE TREE PER 20 SPACES REQUIRED	
150 SPACES / 20 = 7.5 = 8 LARGE TREES	0 TREES PROVIDED
LANDSCAPE ENTRANCES SHALL BE PLANTED WITH SMALL SHRUBS	
NE LOOP 820	PROVIDED
RODGER LINE RD	NOT PROVIDED
PARKING LOTS SHALL BE AT LEAST 5% LANDSCAPED	
222,581 SF x .05 = 11,129 SF LANDSCAPING REQUIRED	2,744 SF PROVIDED

REGISTERED LANDSCAPE ARCHITECT
JAMES W GIBSON
2898
STATE OF TEXAS
DATE: 6/29/2018

EVERGREEN DESIGN GROUP
(800) 680-6630
15305 Dallas Pkwy., Ste 300
Addison, TX 75001
www.landscape-consultants.net

Rev. | Date | Comments | By

DYNAMIC ENGINEERING
(dba) MIDWEST DYNAMIC ENGINEERING CONSULTANTS, PC
LAND DEVELOPMENT CONSULTING • PERMITTING • GEOTECHNICAL • ENVIRONMENTAL • SURVEY • PLANNING & ZONING
Additional offices conveniently located at:
14521 Old Katy Road, Suite 250, Houston, TX 77079 T: 281.789.6400 | 901 Mopac Expressway South, Barton Oaks Plaza One, Suite 300, Austin, TX 78746 T:512.646.2646
1904 Main Street, Lake Como, NJ 07719 T: 732.974.0198 F: 732.974.3521 | 245 Main Street, Suite 110, Chester, NJ 07930 T: 908.879.9229 F: 908.879.0222
790 Newtown Yardley Road, Suite 425, PA 18940 T: 267.685.0276 F: 267.685.0361 | 8 Robbins Street, Suite 102, Toms River, NJ 08753 T: 732.974.0198 F: 732.974.3521

Texas Registered Engineering Firm No. F-13660
1301 Central Expressway South - Suite 210
Allen, TX 75013
T: 972.534.2100
www.dynamicec.com

TITLE: LANDSCAPE PLANTING

PROJECT: VPS
CHRYSLER DODGE JEEP RAM N. RICHLAND HILLS
LOT B, LOT 1C, BLOCK E, LOT 1R, BLOCK CR
7740 NE LOOP 820
CITY OF NORTH RICHLAND HILLS, TARRANT COUNTY, TEXAS

JOB No: 2320-99-007
DATE:
DRAWN BY: JWG
DESIGNED BY: JWG
CHECKED BY: RM
SCALE: (H) AS (V) SHOWN
SHEET No: 1
1 OF 3
CONSTRUCTION CHECK DATE
CONSTRUCTION CHECK DATE
DEC Client Code: 2320
Rev. # 0

Plotted: 06/29/18 – 10:01 AM, By: , – Product Ver: $(GETVAR,??)
File: /Users/kenn/Dropbox (Rodney)/EDG – Shared/2018/North Richland Hills TX/CDJR/CDRJ Landscape 2018-06-29.dwg, ---> LP-1

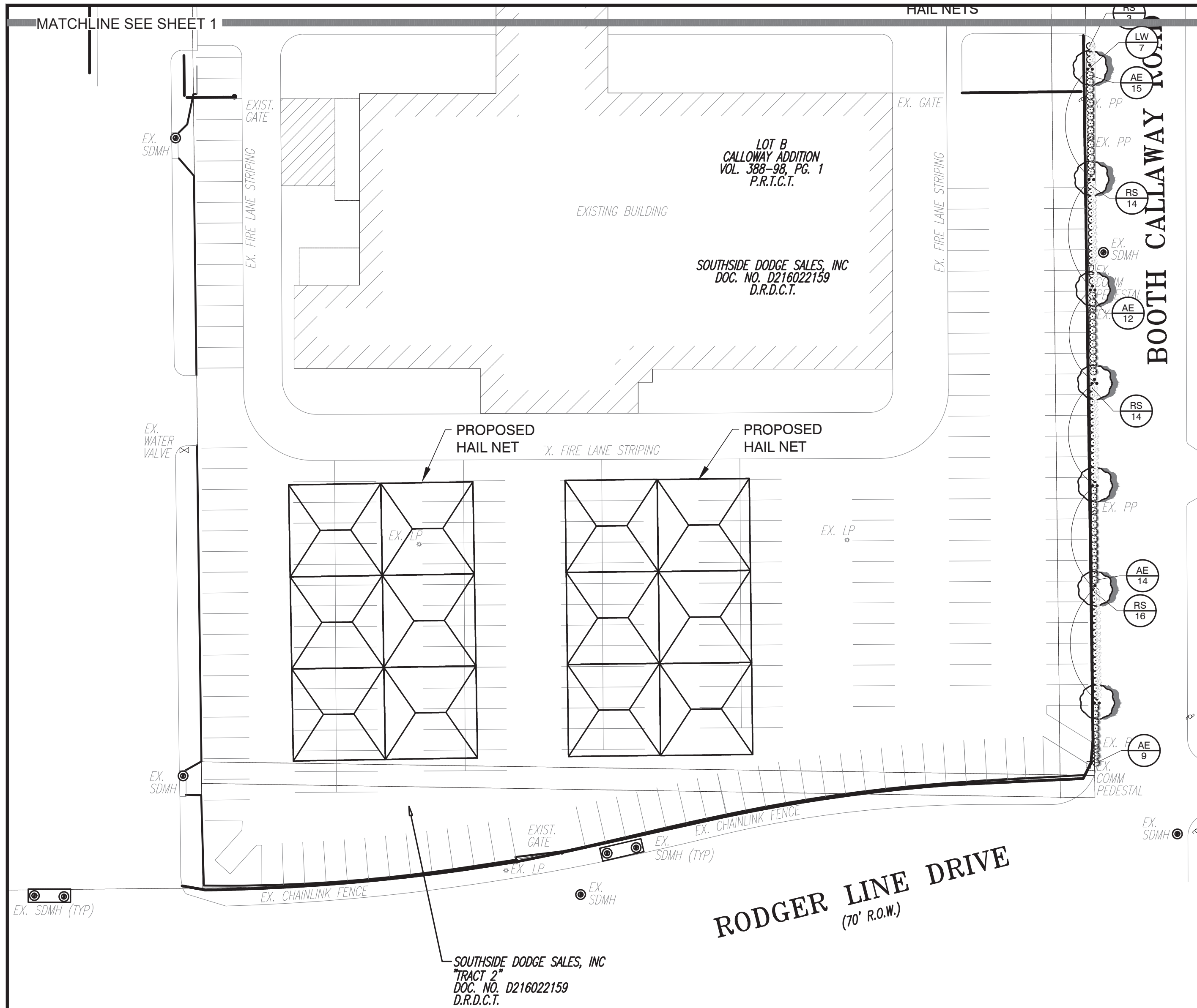

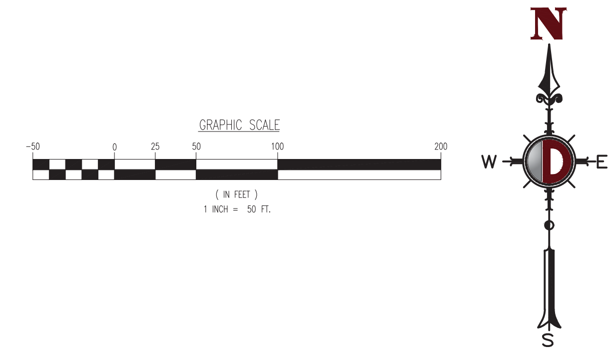

PLANT_SCHEDULE

TREES	CODE	BOTANICAL NAME / COMMON NAME	CONT	CAL	HEIGHT		QTY
	LW	Lagerstroemia indica `Watermelon Red` / Watermelon Red Crape Myrtle Multi trunk - 3-5 canes, 2" caliper overall.	30 gal	2"Cal	8`-10`		13
SHRUBS	CODE	BOTANICAL NAME / COMMON NAME	SIZE			SPACING	QTY
	AE	Abelia x grandiflora `Edward Goucher` / Glossy Abelia	3 gal			36" o.c.	95
	IN	Ilex vomitoria `Nana` / Dwarf Yaupon	3 gal			36" o.c.	104
	RS	Rhaphiolepis indica `Snow White` / Snow White Indian Hawthorn	5 gal			36" o.c.	82

GENERAL LANDSCAPE NOTES

1. THE GENERAL CONTRACTOR IS RESPONSIBLE FOR REMOVING ALL EXISTING VEGETATION (EXCEPT WHERE NOTED TO REMAIN). BEFORE STARTING WORK, THE LANDSCAPE CONTRACTOR SHALL VERIFY THAT THE GRADE OF ALL LANDSCAPE AREAS ARE WITHIN +/-0.1' OF FINISH GRADE. THE LANDSCAPE CONTRACTOR SHALL NOTIFY THE OWNER IMMEDIATELY SHOULD ANY DISCREPANCIES EXIST. SEE SPECIFICATIONS FOR MORE DETAILED INSTRUCTION ON TURF AREA AND PLANTING BED PREPARATION.
2. THE LANDSCAPE CONTRACTOR SHALL CONSTRUCT AND MAINTAIN FINISH GRADES AS SHOWN ON GRADING PLANS, AND CONSTRUCT AND MAINTAIN SLOPES AS RECOMMENDED BY THE GEOTECHNICAL REPORT. ALL LANDSCAPE AREAS SHALL HAVE POSITIVE DRAINAGE AWAY FROM STRUCTURES AT THE MINIMUM SLOPE SPECIFIED IN THE REPORT, AND AREAS OF POTENTIAL PONDING SHALL BE REGRADED TO BLEND IN WITH THE SURROUNDING GRADES AND ELIMINATE PONDING POTENTIAL. SHOULD ANY CONFLICTS AND/OR DISCREPANCIES ARISE BETWEEN THE GRADING PLANS, GEOTECHNICAL REPORT, THESE NOTES, AND ACTUAL CONDITIONS, THE CONTRACTOR SHALL IMMEDIATELY BRING SUCH ITEMS TO THE ATTENTION OF THE LANDSCAPE ARCHITECT AND OWNER.
3. CONTRACTOR SHALL ENSURE THAT THE GRADE IN SOD AREAS SHALL BE 1" BELOW FINISH GRADE BEFORE INSTALLING SOIL AMENDMENTS, AND 2" BELOW FINISH GRADE IN SHRUB AREAS BEFORE INSTALLING SOIL AMENDMENTS. MULCH COVER WITHIN 6" OF CONCRETE WALKS AND CURBS SHALL NOT PROTRUDE ABOVE THE FINISH SURFACE OF THE WALKS AND CURBS. MULCH COVER WITHIN 12" OF WALLS SHALL BE AT LEAST 3" LOWER THAN THE TOP OF WALL.
4. INSTALL 5 OUNCE, WOVEN, NEEDLE-PUNCHED POLYPROPYLENE FABRIC UNDER ALL MULCHED AREAS AND INDIVIDUAL TREE RINGS.
5. INSTALL 3" THICK LAYER OF "RARE RED ROCK #1" GRAVEL MULCH TOPDRESSING, AS AVAILABLE FROM FULLER 5 LANDSCAPE SUPPLY, CUSSETA, ALABAMA, (888) 749-2880, IN ALL PLANTING BEDS.
6. INSTALL 14G, GREEN STEEL EDGING BETWEEN ALL PLANTING BEDS AND TURF AREAS, AND BETWEEN GROUNDCOVERS AND OTHER PLANTS (WHERE INDICATED ON THE PLAN).
7. HYDROMULCH ALL DISTURBED AREAS OUTSIDE OF PROPERTY LIMITS (UNLESS SHOWN AS SOD).
8. ALL PLANT LOCATIONS ARE DIAGRAMMATIC. ACTUAL LOCATIONS SHALL BE VERIFIED WITH THE LANDSCAPE ARCHITECT OR DESIGNER PRIOR TO PLANTING. THE LANDSCAPE CONTRACTOR SHALL ENSURE THAT ALL REQUIREMENTS OF THE PERMITTING AUTHORITY ARE MET (I.E., MINIMUM PLANT QUANTITIES, PLANTING METHODS, TREE PROTECTION METHODS, ETC.).
9. THE LANDSCAPE CONTRACTOR IS RESPONSIBLE FOR DETERMINING PLANT QUANTITIES; PLANT QUANTITIES SHOWN ON LEGENDS AND CALLOUTS ARE FOR GENERAL INFORMATION ONLY. IN THE EVENT OF A DISCREPANCY BETWEEN THE PLAN AND THE PLANT LEGEND, THE PLANT QUANTITY AS SHOWN ON THE PLAN (FOR INDIVIDUAL SYMBOLS) OR CALLOUT (FOR GROUNDCOVER PATTERNS) SHALL TAKE PRECEDENCE.
10. NO SUBSTITUTIONS OF PLANT MATERIALS SHALL BE ALLOWED. IF SOME OF THE PLANTS ARE NOT AVAILABLE, THE LANDSCAPE CONTRACTOR SHALL NOTIFY THE LANDSCAPE DESIGNER IN WRITING (VIA PROPER CHANNELS).
11. PLANTS MAY BE INSPECTED AND APPROVED OR REJECTED ON THE JOBSITE BY THE OWNER OR OWNER'S REPRESENTATIVE.
12. THE LANDSCAPE CONTRACTOR SHALL BE RESPONSIBLE FOR THE MAINTENANCE OF ALL WORK SHOWN ON THESE PLANS FOR 90 DAYS BEYOND FINAL ACCEPTANCE OF ALL LANDSCAPE WORK BY THE OWNER. LANDSCAPE MAINTENANCE SHALL INCLUDE WEEKLY SITE VISITS FOR THE FOLLOWING ACTIONS (AS APPROPRIATE): PROPER PRUNING, RESTAKING OF TREES, RESETTING OF PLANTS THAT HAVE SETTLED, MOWING AND AERATION OF LAWNS, WEEDING, RESEEDING AREAS WHICH HAVE NOT GERMINATED WELL, TREATING FOR INSECTS AND DISEASES,REPLACEMENT OF MULCH, REMOVAL OF LITTER, REPAIRS TO THE IRRIGATION SYSTEM DUE TO FAULTY PARTS AND/OR WORKMANSHIP, AND THE APPROPRIATE WATERING OF ALL PLANTINGS. THE LANDSCAPE CONTRACTOR SHALL MAINTAIN THE IRRIGATION SYSTEM IN PROPER WORKING ORDER, WITH SCHEDULING ADJUSTMENTS BY SEASON TO MAXIMIZE WATER CONSERVATION.
13. SHOULD SEEDED AND/OR SODDED AREAS NOT BE COVERED BY AN AUTOMATIC IRRIGATION SYSTEM, THE LANDSCAPE CONTRACTOR SHAL BE RESPONSIBLE FOR WATERING THESE AREAS AND OBTAINING A FULL STAND OF GRASS AT NO ADDITIONAL COST TO THE OWNER.
14. TO ACHIEVE FINAL ACCEPTANCE AT THE END OF THE MAINTENANCE PERIOD, ALL OF THE FOLLOWING CONDITIONS MUST OCCUR:
    A. THE LANDSCAPE SHALL SHOW ACTIVE, HEALTHY GROWTH (WITH EXCEPTIONS MADE FOR SEASONAL DORMANCY). ALL PLANTS NOT MEETING THIS CONDITION SHALL BE REJECTED AND REPLACED BY HEALTHY PLANT MATERIAL PRIOR TO FINAL ACCEPTANCE.
    B. ALL HARDSCAPE SHALL BE CLEANED PRIOR TO FINAL ACCEPTANCE.
    C. SODDED AREAS MUST BE ACTIVELY GROWING AND MUST REACH A MINIMUM HEIGHT OF 1 1/2 INCHES BEFORE FIRST MOWING. HYDROMULCHED AREAS SHALL SHOW ACTIVE, HEALTHY GROWTH. BARE AREAS LARGER THAN TWELVE SQUARE INCHES MUST BE RESODDED OR RESEEDED (AS APPROPRIATE) PRIOR TO FINAL ACCEPTANCE. ALL SODDED TURF SHALL BE NEATLY MOWED.
15. SEE SPECIFICATIONS AND DETAILS FOR FURTHER REQUIREMENTS.

ROOT BARRIERS

THE CONTRACTOR SHALL INSTALL ROOT BARRIERS NEAR ALL NEWLY-PLANTED TREES THAT ARE LOCATED WITHIN FIVE (5) FEET OF PAVING OR CURBS. ROOT BARRIERS SHALL BE "CENTURY" OR "DEEP-ROOT" 24" DEEP PANELS (OR EQUAL). BARRIERS SHALL BE LOCATED IMMEDIATELY ADJACENT TO HARDSCAPE. INSTALL PANELS PER MANUFACTURER'S RECOMMENDATIONS. UNDER NO CIRCUMSTANCES SHALL THE CONTRACTOR USE ROOT BARRIERS OF A TYPE THAT COMPLETELY ENCIRCLE THE ROOTBALL.

MULCHES

AFTER ALL PLANTING IS COMPLETE, CONTRACTOR SHALL INSTALL 4" THICK LAYER OF "RARE RED ROCK #1" GRAVEL MULCH TOPDRESSING, AS AVAILABLE FROM FULLER 5 LANDSCAPE SUPPLY, CUSSETA, ALABAMA, (888) 749-2880 (OR EQUAL), OVER LANDSCAPE FABRIC IN ALL PLANTING AREAS. CONTRACTOR SHALL SUBMIT SAMPLES OF ALL MULCHES TO LANDSCAPE ARCHITECT AND OWNER FOR APPROVAL PRIOR TO CONSTRUCTION. ABSOLUTELY NO EXPOSED GROUND SHALL BE LEFT SHOWING ANYWHERE ON THE PROJECT AFTER MULCH HAS BEEN INSTALLED.

LANDSCAPE CALCULATIONS CDJR

TOTAL SITE AREA:	257,691 SF
LANDSCAPE AREA REQUIRED:	38,653 SF (15% OF SITE AREA)
LANDSCAPE AREA PROVIDED:	7,704 SF (2.9% OF SITE AREA)
LANDSCAPE SETBACK	
15' LANDSCAPE SETBACK REQUIRED ADJACENT TO ROW	
NE LOOP 820	17'-1' SETBACK PROVIDED
RODGER LINE RD	0' SETBACK PROVIDED
BOOTH CALLAWAY RD	0' SETBACK PROVIDED
REQUIRED TREES IN SETBACK	
NE LOOP 820 387 FEET / 50 = 7.74 =8 TREES REQUIRED	8 TREES PROVIDED
RODGER LINE RD 388 FEET / 50 = 7.76 =8 TREES REQUIRED	6 TREES PROVIDED
BOOTH CALLAWAY RD 636 FEET / 50 = 12.7 =13 TREES REQUIRED	13 TREES PROVIDED
REQUIRED SHRUBS IN SETBACK	
NE LOOP 820 387 FEET / 50 x 10 = 77 SHRUBS REQUIRED	138 SHRUBS PROVIDED
RODGER LINE RD 388 FEET / 50 x 10 = 77 SHRUBS REQUIRED	0 SHRUBS PROVIDED
BOOTH CALLAWAY RD 636 FEET / 50 x 10 = 127 SHRUBS REQUIRED	179 SHRUBS PROVIDED
PARKING LOT SCREENING	
PARKING LOTS SHALL BE SCREENED WITH EVERGREEN SHRUBS PLACED AT 3 FEET O.C.	
NE LOOP 820	PROVIDED
RODGER LINE RD	NOT PROVIDED
BOOTH CALLAWAY RD	PROVIDED
PARKING LOT LANDSCAPING	
PARKING LOTS SHALL HAVE 5% LANDSCAPED AREA	NOT PROVIDED
ONE LARGE TREE PER 20 SPACES REQUIRED	
150 SPACES / 20 = 7.5 = 8 LARGE TREES	0 TREES PROVIDED
LANDSCAPE ENTRANCES SHALL BE PLANTED WITH SMALL SHRUBS	
NE LOOP 820	PROVIDED
RODGER LINE RD	NOT PROVIDED
PARKING LOTS SHALL BE AT LEAST 5% LANDSCAPED	
222,581 SF x .05 = 11,129 SF LANDSCAPING REQUIRED	2,744 SF PROVIDED

REGISTERED LANDSCAPE ARCHITECT
JAMES W GIBSON
2898
STATE OF TEXAS

DATE: 6/29/18

EVERGREEN
DESIGN GROUP
(800) 680-6630
15305 Dallas Pkwy., Ste 300
Addison, TX 75001
www.landscape-consultants.net

Rev. | Date | Comments | By

DYNAMIC ENGINEERING
(dba) MIDWEST DYNAMIC ENGINEERING CONSULTANTS, PC
LAND DEVELOPMENT CONSULTING • PERMITTING • GEOTECHNICAL • ENVIRONMENTAL • SURVEY • PLANNING & ZONING
Additional offices conveniently located at:
14521 Old Katy Road, Suite 250, Houston, TX 77079 T: 281.789.6400 | 901 Mopac Expressway South, Barton Oaks Plaza One, Suite 300, Austin, TX 78746 T:512.646.2646
1904 Main Street, Lake Como, NJ 07719 T: 732.974.0198 F: 732.974.3521 | 245 Main Street, Suite 110, Chester, NJ 07930 T: 908.879.9229 F: 908.879.0222
790 Newtown Yardley Road, Suite 425, PA 18940 T: 267.685.0276 F: 267.685.0361 | 8 Robbins Street, Suite 102, Toms River, NJ 08753 T: 732.974.0198 F: 732.974.3521

Texas Registered Engineering Firm No. F-13660
1301 Central Expressway South - Suite 210
Allen, TX 75013
T: 972.534.2100
www.dynamicec.com

TITLE: LANDSCAPE PLANTING

PROJECT: VPS
CHRYSLER DODGE JEEP RAM N. RICHLAND HILLS
LOT B, LOT 1C, BLOCK E, LOT 1R, BLOCK CR
7740 NE LOOP 820
CITY OF NORTH RICHLAND HILLS, TARRANT COUNTY, TEXAS

JOB No: 2320-99-007
DATE:
DRAWN BY: JWG
DESIGNED BY: JWG
CHECKED BY: RM
SCALE: (H) AS (V) SHOWN
CONSTRUCTION CHECK DATE
CONSTRUCTION CHECK DATE
SHEET No: 2
2 OF 3
DEC Client Code: 2320
Rev. # 0

Plotted: 06/29/18 - 3:23 PM, By: , - Product Ver: $(GETVAR,??)
File: /Users/kenn/Dropbox (Rodney)/EDG - Shared/2018/North Richland Hills TX/CDJR/CDRJ Landscape 2018-06-29.dwg, ---> LP-1

PLANTING SPECIFICATIONS

GENERAL

A. QUALIFICATIONS OF LANDSCAPE CONTRACTOR
   1. ALL LANDSCAPE WORK SHOWN ON THESE PLANS SHALL BE PERFORMED BY A SINGLE FIRM SPECIALIZING IN LANDSCAPE PLANTING.
   2. A LIST OF SUCCESSFULLY COMPLETED PROJECTS OF THIS TYPE, SIZE AND NATURE MAY BE REQUESTED BY THE OWNER FOR FURTHER QUALIFICATION MEASURES.
   3. THE LANDSCAPE CONTRACTOR SHALL HOLD A VALID NURSERY AND FLORAL CERTIFICATE ISSUED BY THE TEXAS DEPARTMENT OF AGRICULTURE, AS WELL AS OPERATE UNDER A COMMERCIAL PESTICIDE APPLICATOR LICENSE ISSUED BY EITHER THE TEXAS DEPARTMENT OF AGRICULTURE OR THE TEXAS STRUCTURAL PEST CONTROL BOARD.

B. SCOPE OF WORK
   1. WORK COVERED BY THESE SECTIONS INCLUDES THE FURNISHING AND PAYMENT OF ALL MATERIALS, LABOR, SERVICES, EQUIPMENT, LICENSES, TAXES AND ANY OTHER ITEMS THAT ARE NECESSARY FOR THE EXECUTION, INSTALLATION AND COMPLETION OF ALL WORK, SPECIFIED HEREIN AND / OR SHOWN ON THE LANDSCAPE PLANS, NOTES, AND DETAILS.
   2. ALL WORK SHALL BE PERFORMED IN ACCORDANCE WITH ALL APPLICABLE LAWS, CODES AND REGULATIONS REQUIRED BY AUTHORITIES HAVING JURISDICTION OVER SUCH WORK, INCLUDING ALL INSPECTIONS AND PERMITS REQUIRED BY FEDERAL, STATE AND LOCAL AUTHORITIES IN SUPPLY, TRANSPORTATION AND INSTALLATION OF MATERIALS.
   3. THE LANDSCAPE CONTRACTOR SHALL VERIFY THE LOCATION OF ALL UNDERGROUND UTILITY LINES (WATER, SEWER, ELECTRICAL, TELEPHONE, GAS, CABLE, TELEVISION, ETC.) PRIOR TO THE START OF ANY WORK.

PRODUCTS

A. ALL MANUFACTURED PRODUCTS SHALL BE NEW.

B. CONTAINER AND BALLED-AND-BURLAPPED PLANTS:
   1. FURNISH NURSERY-GROWN PLANTS COMPLYING WITH ANSI Z60.1-2004. PROVIDE WELL-SHAPED, FULLY BRANCHED, HEALTHY, VIGOROUS STOCK FREE OF DISEASE, INSECTS, EGGS, LARVAE, AND DEFECTS SUCH AS KNOTS, SUN SCALD, INJURIES, ABRASIONS, AND DISFIGUREMENT. ALL PLANTS WITHIN A SPECIES SHALL HAVE SIMILAR SIZE, AND SHALL BE OF A FORM TYPICAL FOR THE SPECIES. ALL TREES SHALL BE OBTAINED FROM SOURCES WITHIN 200 MILES OF THE PROJECT SITE, AND WITH SIMILAR CLIMACTIC CONDITIONS.
   2. ROOT SYSTEMS SHALL BE HEALTHY, DENSELY BRANCHED ROOT SYSTEMS, NON-POT-BOUND, FREE FROM ENCIRCLING AND/OR GIRDLING ROOTS, AND FREE FROM ANY OTHER ROOT DEFECTS (SUCH AS J-SHAPED ROOTS).
   3. ANY PLANT DEEMED UNACCEPTABLE BY THE LANDSCAPE ARCHITECT OR OWNER SHALL BE IMMEDIATELY REMOVED FROM THE SITE AND SHALL BE REPLACED WITH AN ACCEPTBLE PLANT OF LIKE TYPE AND SIZE AT THE CONTRACTOR'S OWN EXPENSE. ANY PLANTS APPEARING TO BE UNHEALTHY, EVEN IF DETERMINED TO STILL BE ALIVE, SHALL NOT BE ACCEPTED. THE LANDSCAPE ARCHITECT AND OWNER SHALL BE THE SOLE JUDGES AS TO THE ACCEPTABILITY OF PLANT MATERIAL.
   4. ALL TREES SHALL BE STANDARD IN FORM, UNLESS OTHERWISE SPECIFIED. TREES WITH CENTRAL LEADERS WILL NOT BE ACCEPTED IF LEADER IS DAMAGED OR REMOVED. PRUNE ALL DAMAGED TWIGS AFTER PLANTING.
   5. CALIPER MEASUREMENTS FOR STANDARD (SINGLE TRUNK) TREES SHALL BE AS FOLLOWS: SIX INCHES ABOVE THE ROOT FLARE FOR TREES UP TO AND INCLUDING FOUR INCHES IN CALIPER, AND TWELVE INCHES ABOVE THE ROOT FLARE FOR TREES EXCEEDING FOUR INCHES IN CALIPER.
   6. MULTI-TRUNK TREES SHALL BE MEASURED BY THEIR OVERALL HEIGHT, MEASURED FROM THE TOP OF THE ROOT BALL.
   7. ANY TREE OR SHRUB SHOWN TO HAVE EXCESS SOIL PLACED ON TOP OF THE ROOT BALL, SO THAT THE ROOT FLARE HAS BEEN COMPLETELY COVERED, SHALL BE REJECTED.

C. SOD: PROVIDE WELL-ROOTED SOD OF THE VARIETY NOTED ON THE PLANS. SOD SHALL BE CUT FROM HEALTHY, MATURE TURF WITH SOIL THICKNESS OF 3/4" TO 1". EACH PALLET OF SOD SHALL BE ACCOMPANIED BY A CERTIFICATE FROM SUPPLIER STATING THE COMPOSITION OF THE SOD.

D. SEED: PROVIDE BLEND OF SPECIES AND VARIETIES AS NOTED ON THE PLANS, WITH MAXIMUM PERCENTAGES OF PURITY, GERMINATION, AND MINIMUM PERCENTAGE OF WEED SEED AS INDICATED ON PLANS. EACH BAG OF SEED SHALL BE ACCOMPANIED BY A TAG FROM THE SUPPLIER INDICATING THE COMPOSITION OF THE SEED.

E. TOPSOIL: SANDY TO CLAY LOAM TOPSOIL, FREE OF STONES LARGER THAN ½ INCH, FOREIGN MATTER, PLANTS, ROOTS, AND SEEDS.

F. COMPOST: WELL-COMPOSTED, STABLE, AND WEED-FREE ORGANIC MATTER, pH RANGE OF 5.5 TO 8; MOISTURE CONTENT 35 TO 55 PERCENT BY WEIGHT; 100 PERCENT PASSING THROUGH 3/4-INCH SIEVE; SOLUBLE SALT CONTENT OF 5 TO 10 DECISIEMENS/M; NOT EXCEEDING 0.5 PERCENT INERT CONTAMINANTS AND FREE OF SUBSTANCES TOXIC TO PLANTINGS. NO MANURE OR ANIMAL-BASED PRODUCTS SHALL BE USED.

G. FERTILIZER: GRANULAR FERTILIZER CONSISTING OF NITROGEN, PHOSPHORUS, POTASSIUM, AND OTHER NUTRIENTS IN PROPORTIONS, AMOUNTS, AND RELEASE RATES RECOMMENDED IN A SOIL REPORT FROM A QUALIFIED SOIL-TESTING AGENCY (SEE BELOW).

H. MULCH: SIZE AND TYPE AS INDICATED ON PLANS, FREE FROM DELETERIOUS MATERIALS AND SUITABLE AS A TOP DRESSING OF TREES AND SHRUBS.

I. WEED FABRIC: 5 OUNCE, WOVEN, NEEDLE-PUNCHED FABRIC, SUCH AS DEWITT PRO5 LANDSCAPE FABRIC (OR APPROVED EQUAL).

J. TREE STAKING AND GUYING
   1. STAKES: 6' LONG GREEN METAL T-POSTS.
   2. GUY AND TIE WIRE: ASTM A 641, CLASS 1, GALVANIZED-STEEL WIRE, 2-STRAND, TWISTED, 0.106 INCH DIAMETER.
   3. STRAP CHAFING GUARD: REINFORCED NYLON OR CANVAS AT LEAST 1-1/2 INCH WIDE, WITH GROMMETS TO PROTECT TREE TRUNKS FROM DAMAGE.

K. STEEL EDGING: PROFESSIONAL STEEL EDGING, 14 GAUGE THICK X 4 INCHES WIDE, FACTORY PAINTED DARK GREEN. ACCEPTABLE MANUFACTURERS INCLUDE COL-MET OR APPROVED EQUAL.

L. PRE-EMERGENT HERBICIDES: ANY GRANULAR, NON-STAINING PRE-EMERGENT HERBICIDE THAT IS LABELED FOR THE SPECIFIC ORNAMENTALS OR TURF ON WHICH IT WILL BE UTILIZED. PRE-EMERGENT HERBICIDES SHALL BE APPLIED PER THE MANUFACTURER'S LABELED RATES.

METHODS

A. SOIL PREPARATION
   1. BEFORE STARTING WORK, THE LANDSCAPE CONTRACTOR SHALL VERIFY THAT THE GRADE OF ALL LANDSCAPE AREAS ARE WITHIN +/-0.1' OF FINISH GRADE. THE CONTRACTOR SHALL NOTIFY THE OWNER IMMEDIATELY SHOULD ANY DISCREPANCIES EXIST.
   2. SOIL TESTING:
      a. AFTER FINISH GRADES HAVE BEEN ESTABLISHED, CONTRACTOR SHALL HAVE SOIL SAMPLES TESTED BY AN ESTABLISHED SOIL TESTING LABORATORY FOR THE FOLLOWING: SOIL TEXTURAL CLASS, GENERAL SOIL FERTILITY, pH, ORGANIC MATTER CONTENT, SALT (CEC), LIME, SODIUM ADSORPTION RATIO (SAR) AND BORON CONTENT. EACH SAMPLE SUBMITTED SHALL CONTAIN NO LESS THAN ONE QUART OF SOIL.
      b. CONTRACTOR SHALL ALSO SUBMIT THE PROJECT'S PLANT LIST TO THE LABORATORY ALONG WITH THE SOIL SAMPLES.
      c. THE SOIL REPORT PRODUCED BY THE LABORATORY SHALL CONTAIN RECOMMENDATIONS FOR THE FOLLOWING (AS APPROPRIATE): GENERAL SOIL PREPARATION AND BACKFILL MIXES, PRE-PLANT FERTILIZER APPLICATIONS, AND ANY OTHER SOIL RELATED ISSUES. THE REPORT SHALL ALSO PROVIDE A FERTILIZER PROGRAM FOR THE ESTABLISHMENT PERIOD AND FOR LONG-TERM MAINTENANCE.
   3. THE CONTRACTOR SHALL INSTALL SOIL AMENDMENTS AND FERTILIZERS PER THE SOILS REPORT RECOMMENDATIONS. ANY CHANGE IN COST DUE TO THE SOIL REPORT RECOMMENDATIONS, EITHER INCREASE OR DECREASE, SHALL BE SUBMITTED TO THE OWNER WITH THE REPORT.
   4. FOR BIDDING PURPOSES ONLY, THE SOIL PREPARATION SHALL CONSIST OF THE FOLLOWING:
      a. TURF: INCORPORATE THE FOLLOWING AMENDMENTS INTO THE TOP 8" OF SOIL BY MEANS OF ROTOTILLING AFTER CROSS-RIPPING:
         i. NITROGEN STABILIZED ORGANIC AMENDMENT - 4 CU. YDS. PER 1,000 S.F.
         ii. AMMONIUM PHOSPHATE 16-20-0 - 15 LBS PER 1,000 S.F.
         iii. AGRICULTURAL GYPSUM - 100 LBS PER 1,000 S.F.
      b. TREES, SHRUBS, AND PERENNIALS: INCORPORATE THE FOLLOWING AMENDMENTS INTO THE TOP 8" OF SOIL BY MEANS OF ROTOTILLING AFTER CROSS-RIPPING:
         i. NITROGEN STABILIZED ORGANIC AMENDMENT - 4 CU. YDS. PER 1,000 S.F.
         ii. 12-12-12 FERTILIZER - 10 LBS. PER CU. YD.
         iii. AGRICULTURAL GYPSUM - 10 LBS. PER CU. YD.
         iv. IRON SULPHATE - 2 LBS. PER CU. YD.
   5. CONTRACTOR SHALL ENSURE THAT THE GRADE IN SOD AREAS SHALL BE 1" BELOW FINISH GRADE BEFORE INSTALLING SOIL AMENDMENTS, AND 2" BELOW FINISH GRADE IN SHRUB AREAS BEFORE INSTALLING SOIL AMENDMENTS. MULCH COVER WITHIN 6" OF CONCRETE WALKS AND CURBS SHALL NOT PROTRUDE ABOVE THE FINISH SURFACE OF THE WALKS AND CURBS. MULCH COVER WITHIN 12" OF WALLS SHALL BE AT LEAST 3" LOWER THAN THE TOP OF WALL.
   6. ONCE SOIL PREPARATION IS COMPLETE, THE LANDSCAPE CONTRACTOR SHALL ENSURE THAT THERE ARE NO DEBRIS, TRASH, OR STONES LARGER THAN 1" REMAINING IN THE TOP 6" OF SOIL.

B. GENERAL PLANTING
   1. REMOVE ALL NURSERY TAGS AND STAKES FROM PLANTS.
   2. EXCEPT IN AREAS TO BE PLANTED WITH ORNAMENTAL GRASSES, APPLY PRE-EMERGENT HERBICIDES AT THE MANUFACTURER'S RECOMMENDED RATE.
   3. TRENCHING NEAR EXISTING TREES:
      a. CONTRACTOR SHALL NOT DISTURB ROOTS 1-1/2" AND LARGER IN DIAMETER WITHIN THE CRITICAL ROOT ZONE (CRZ) OF EXISTING TREES, AND SHALL EXERCISE ALL POSSIBLE CARE AND PRECAUTIONS TO AVOID INJURY TO TREE ROOTS, TRUNKS, AND BRANCHES. THE CRZ IS DEFINED AS A CIRCULAR AREA EXTENDING OUTWARD FROM THE TREE TRUNK, WITH A RADIUS EQUAL TO 1' FOR EVERY 1" OF TRUNK DIAMETER-AT-BREAST-HEIGHT (4.5' ABOVE THE AVERAGE GRADE AT THE TRUNK).
      b. ALL EXCAVATION WITHIN THE CRZ SHALL BE PERFORMED USING HAND TOOLS. NO MACHINE EXCAVATION OR TRENCHING OF ANY KIND SHALL BE ALLOWED WITHIN THE CRZ.
      c. ALTER ALIGNMENT OF PIPE TO AVOID TREE ROOTS 1-1/2" AND LARGER IN DIAMETER. WHERE TREE ROOTS 1-1/2" AND LARGER IN DIAMETER ARE ENCOUNTERED IN THE FIELD, TUNNEL UNDER SUCH ROOTS. WRAP EXPOSED ROOTS WITH SEVERAL LAYERS OF BURLAP AND KEEP MOIST. CLOSE ALL TRENCHES WITHIN THE CANOPY DRIP LINES WITHIN 24 HOURS.
      d. ALL SEVERED ROOTS SHALL BE HAND PRUNED WITH SHARP TOOLS AND ALLOWED TO AIR-DRY. DO NOT USE ANY SORT OF SEALERS OR WOUND PAINTS.

C. TREE PLANTING
   1. TREE PLANTING HOLES SHALL BE EXCAVATED TO MINIMUM WIDTH OF TWO TIMES THE WIDTH OF THE ROOTBALL, AND TO A DEPTH EQUAL TO THE DEPTH OF THE ROOTBALL LESS TWO TO FOUR INCHES.
   2. SCARIFY THE SIDES AND BOTTOM OF THE PLANTING HOLE PRIOR TO THE PLACEMENT OF THE TREE. REMOVE ANY GLAZING THAT MAY HAVE BEEN CAUSED DURING THE EXCAVATION OF THE HOLE.
   3. FOR CONTAINER AND BOX TREES, TO REMOVE ANY POTENTIALLY GIRDLING ROOTS AND OTHER ROOT DEFECTS, THE CONTRACTOR SHALL SHAVE A 1" LAYER OFF OF THE SIDES AND BOTTOM OF THE ROOTBALL OF ALL TREES JUST BEFORE PLACING INTO THE PLANTING PIT. DO NOT "TEASE" ROOTS OUT FROM THE ROOTBALL.
   4. INSTALL THE TREE ON UNDISTURBED SUBGRADE SO THAT THE TOP OF THE ROOTBALL IS TWO TO FOUR INCHES ABOVE THE SURROUNDING GRADE.
   5. BACKFILL THE TREE HOLE UTILIZING THE EXISTING TOPSOIL FROM ON-SITE. ROCKS LARGER THAN 1" DIA. AND ALL OTHER DEBRIS SHALL BE REMOVED FROM THE SOIL PRIOR TO THE BACKFILL. SHOULD ADDITIONAL SOIL BE REQUIRED TO ACCOMPLISH THIS TASK, USE STORED TOPSOIL FROM ON-SITE OR IMPORT ADDITIONAL TOPSOIL FROM OFF-SITE AT NO ADDITIONAL COST TO THE OWNER. IMPORTED TOPSOIL SHALL BE OF SIMILAR TEXTURAL CLASS AND COMPOSITION IN THE ON-SITE SOIL.
   6. THE TOTAL NUMBER OF TREE STAKES (BEYOND THE MINIMUMS LISTED BELOW) WILL BE LEFT TO THE LANDSCAPE CONTRACTOR'S DISCRETION. SHOULD ANY TREES FALL OR LEAN, THE LANDSCAPE CONTRACTOR SHALL STRAIGHTEN THE TREE, OR REPLACE IT SHOULD IT BECOME DAMAGED. TREE STAKING SHALL ADHERE TO THE FOLLOWING GUIDELINES:
      a. 1"-2" TREES — TWO STAKES PER TREE
      b. 2-1/2"-4" TREES — THREE STAKES PER TREE
      c. TREES OVER 4" CALIPER — GUY AS NEEDED
      d. MULTI-TRUNK TREES — THREE STAKES PER TREE MINIMUM, QUANTITY AND POSITIONS AS NEEDED TO STABILIZE THE TREE
   7. UPON COMPLETION OF PLANTING, CONSTRUCT AN EARTH WATERING BASIN AROUND THE TREE. COVER THE INTERIOR OF THE TREE RING WITH WITH MULCH (TYPE AND DEPTH PER PLANS).

D. SHRUB, PERENNIAL, AND GROUNDCOVER PLANTING
   1. DIG THE PLANTING HOLES TWICE AS WIDE AND 2" LESS DEEP THAN EACH PLANT'S ROOTBALL. INSTALL THE PLANT IN THE HOLE. BACKFILL AROUND THE PLANT WITH SOIL AMENDED PER SOIL TEST RECOMMENDATIONS.
   2. INSTALL THE WEED BARRIER CLOTH, OVERLAPPING IT AT THE ENDS. UTILIZE STEEL STAPLES TO KEEP THE WEED BARRIER CLOTH IN PLACE.
   3. WHEN PLANTING IS COMPLETE, INSTALL MULCH (TYPE AND DEPTH PER PLANS) OVER ALL PLANTING BEDS, COVERING THE ENTIRE PLANTING AREA.

F. SODDING
   1. SOD VARIETY TO BE AS SPECIFIED ON THE LANDSCAPE PLAN.
   2. LAY SOD WITHIN 24 HOURS FROM THE TIME OF STRIPPING. DO NOT LAY IF THE GROUND IS FROZEN.
   3. LAY THE SOD TO FORM A SOLID MASS WITH TIGHTLY FITTED JOINTS. BUTT ENDS AND SIDES OF SOD STRIPS - DO NOT OVERLAP. STAGGER STRIPS TO OFFSET JOINTS IN ADJACENT COURSES.
   4. ROLL THE SOD TO ENSURE GOOD CONTACT OF THE SOD'S ROOT SYSTEM WITH THE SOIL UNDERNEATH.
   5. WATER THE SOD THOROUGHLY WITH A FINE SPRAY IMMEDIATELY AFTER PLANTING TO OBTAIN AT LEAST SIX INCHES OF PENETRATION INTO THE SOIL BELOW THE SOD.

G. HYDROMULCHING
   1. TURF HYDROMULCH MIX (PER 1,000 SF) SHALL BE AS FOLLOWS:
      a. WINTER MIX (OCTOBER 1 - MARCH 31)
         50# CELLULOSE FIBER MULCH
         2# UNHULLED BERMUDA SEED
         2# ANNUAL RYE SEED
         15# 15-15-15 WATER SOLUBLE FERTILIZER
      b. SUMMER MIX (APRIL 1 - SEPTEMBER 30)
         50# CELLULOSE FIBER MULCH
         2# HULLED BERMUDA SEED
         15# 15-15-15 WATER SOLUBLE FERTILIZER
   2. SEED HYDROMULCH MIX (PER 1,000 SF) SHALL BE AS FOLLOWS:
      a. GENERAL
         50# CELLULOSE FIBER MULCH
         15# 15-15-15 WATER SOLUBLE FERTILIZER
         SEED RATE PER LEGEND

H. CLEAN UP
   1. DURING LANDSCAPE PREPARATION AND PLANTING, KEEP ALL PAVEMENT CLEAN AND ALL WORK AREAS IN A NEAT, ORDERLY CONDITION.
   2. DISPOSED LEGALLY OF ALL EXCAVATED MATERIALS OFF THE PROJECT SITE.

I. INSPECTION AND ACCEPTANCE
   1. UPON COMPLETION OF THE WORK, THE LANDSCAPE CONTRACTOR SHALL PROVIDE THE SITE CLEAN, FREE OF DEBRIS AND TRASH, AND SUITABLE FOR USE AS INTENDED. THE LANDSCAPE CONTRACTOR SHALL THEN REQUEST AN INSPECTION BY THE OWNER TO DETERMINE FINAL ACCEPTABILITY.
   2. WHEN THE INSPECTED PLANTING WORK DOES NOT COMPLY WITH THE CONTRACT DOCUMENTS, THE LANDSCAPE CONTRACTOR SHALL REPLACE AND/OR REPAIR THE REJECTED WORK TO THE OWNER'S SATISFACTION WITHIN 24 HOURS.
   3. THE LANDSCAPE MAINTENANCE PERIOD WILL NOT COMMENCE UNTIL THE LANDSCAPE WORK HAS BEEN RE-INSPECTED BY THE OWNER AND FOUND TO BE ACCEPTABLE. AT THAT TIME, A WRITTEN NOTICE OF FINAL ACCEPTANCE WILL BE ISSUED BY THE OWNER, AND THE MAINTENANCE AND GUARANTEE PERIODS WILL COMMENCE.

J. LANDSCAPE MAINTENANCE
   1. THE LANDSCAPE CONTRACTOR SHALL BE RESPONSIBLE FOR THE MAINTENANCE OF ALL WORK SHOWN ON THESE PLANS FOR 90 DAYS BEYOND FINAL ACCEPTANCE OF ALL LANDSCAPE WORK BY THE OWNER. LANDSCAPE MAINTENANCE SHALL INCLUDE WEEKLY SITE VISITS FOR THE FOLLOWING ACTIONS (AS APPROPRIATE): PROPER PRUNING, RESTAKING OF TREES, RESETTING OF PLANTS THAT HAVE SETTLED, MOWING AND AERATION OF LAWNS, WEEDING, RESEEDING AREAS WHICH HAVE NOT GERMINATED WELL, TREATING FOR INSECTS AND DISEASES,REPLACEMENT OF MULCH, REMOVAL OF LITTER, REPAIRS TO THE IRRIGATION SYSTEM DUE TO FAULTY PARTS AND/OR WORKMANSHIP, AND THE APPROPRIATE WATERING OF ALL PLANTINGS. THE LANDSCAPE CONTRACTOR SHALL MAINTAIN THE IRRIGATION SYSTEM IN PROPER WORKING ORDER, WITH SCHEDULING ADJUSTMENTS BY SEASON TO MAXIMIZE WATER CONSERVATION.
   2. SHOULD SEEDED AND/OR SODDED AREAS NOT BE COVERED BY AN AUTOMATIC IRRIGATION SYSTEM, THE LANDSCAPE CONTRACTOR SHAL BE RESPONSIBLE FOR WATERING THESE AREAS AND OBTAINING A FULL, HEALTHY STAND OF GRASS AT NO ADDITIONAL COST TO THE OWNER.
   3. TO ACHIEVE FINAL ACCEPTANCE AT THE END OF THE MAINTENANCE PERIOD, ALL OF THE FOLLOWING CONDITIONS MUST OCCUR:
      a. THE LANDSCAPE SHALL SHOW ACTIVE, HEALTHY GROWTH (WITH EXCEPTIONS MADE FOR SEASONAL DORMANCY). ALL PLANTS NOT MEETING THIS CONDITION SHALL BE REJECTED AND REPLACED BY HEALTHY PLANT MATERIAL PRIOR TO FINAL ACCEPTANCE.
      b. ALL HARDSCAPE SHALL BE CLEANED PRIOR TO FINAL ACCEPTANCE.
      c. SODDED AREAS MUST BE ACTIVELY GROWING AND MUST REACH A MINIMUM HEIGHT OF 1 1/2 INCHES BEFORE FIRST MOWING. HYDROMULCHED AREAS SHALL SHOW ACTIVE, HEALTHY GROWTH. BARE AREAS LARGER THAN TWELVE SQUARE INCHES MUST BE RESODDED OR RESEEDED (AS APPROPRIATE) PRIOR TO FINAL ACCEPTANCE. ALL SODDED TURF SHALL BE NEATLY MOWED.

K. WARRANTY PERIOD, PLANT GUARANTEE AND REPLACEMENTS
   1. THE LANDSCAPE CONTRACTOR SHALL GUARANTEE ALL TREES, SHRUBS, PERENNIALS, SOD, SEEDED/HYDROMULCHED AREAS, AND IRRIGATION SYSTEMS FOR A PERIOD OF ONE YEAR FROM THE DATE OF THE OWNER'S FINAL ACCEPTANCE (90 DAYS FOR ANNUAL PLANTS). THE CONTRACTOR SHALL REPLACE, AT HIS OWN EXPENSE AND TO THE SATISFACTION OF THE OWNER, ANY PLANTS WHICH DIE IN THAT TIME, OR REPAIR ANY PORTIONS OF THE IRRIGATION SYSTEM WHICH OPERATE IMPROPERLY.
   2. AFTER THE INITIAL MAINTENANCE PERIOD AND DURING THE GUARANTEE PERIOD, THE LANDSCAPE CONTRACTOR SHALL ONLY BE RESPONSIBLE FOR REPLACEMENT OF PLANTS WHEN PLANT DEATH CANNOT BE ATTRIBUTED DIRECTLY TO OVERWATERING OR OTHER DAMAGE BY HUMAN ACTIONS.

L. PROVIDE A MINIMUM OF (2) COPIES OF RECORD DRAWINGS TO THE OWNER UPON COMPLETION OF WORK. A RECORD DRAWING IS A RECORD OF ALL CHANGES THAT OCCURRED IN THE FIELD AND THAT ARE DOCUMENTED THROUGH CHANGE ORDERS, ADDENDA, OR CONTRACTOR/CONSULTANT DRAWING MARKUPS.

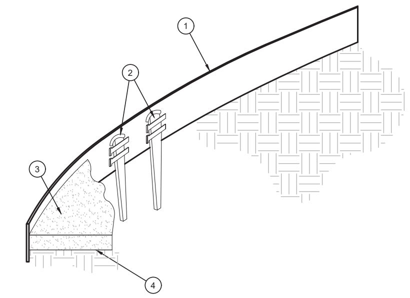

1. ROLLED-TOP STEEL EDGING PER PLANS.
2. TAPERED STEEL STAKES.
3. MULCH, TYPE AND DEPTH PER PLANS.
4. FINISH GRADE.

NOTES:
1) INSTALL EDGING SO THAT STAKES WILL BE ON INSIDE OF PLANTING BED.
2) BOTTOM OF EDGING SHALL BE BURIED A MINIMUM OF 1" BELOW FINISH GRADE.
3) TOP OF MULCH SHALL BE 1" LOWER THAN TOP OF EDGING.

C — STEEL EDGING
SCALE: NOT TO SCALE

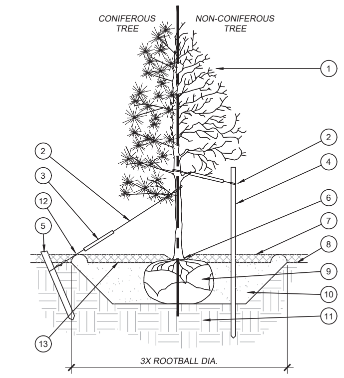

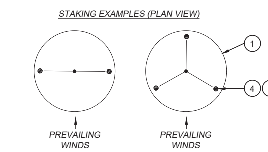

1. TREE CANOPY.
2. CINCH-TIES (24" BOX/2" CAL. TREES AND SMALLER) OR 12 GAUGE GALVANIZED WIRE WITH NYLON TREE STRAPS AT TREE AND STAKE (36" BOX/2.5" CAL. TREES AND LARGER). SECURE TIES OR STRAPS TO TRUNK JUST ABOVE LOWEST MAJOR BRANCHES.
3. 24" X 3/4" P.V.C. MARKERS OVER WIRES.
4. GREEN STEEL T-POSTS. EXTEND POSTS 12" MIN. INTO UNDISTURBED SOIL.
5. PRESSURE-TREATED WOOD DEADMAN, TWO PER TREE (MIN.). BURY OUTSIDE OF PLANTING PIT AND 18" MIN. INTO UNDISTURBED SOIL.
6. TRUNK FLARE.
7. MULCH, TYPE AND DEPTH PER PLANS. DO NOT PLACE MULCH WITHIN 6" OF TRUNK.
8. FINISH GRADE.
9. ROOT BALL.
10. BACKFILL. AMEND AND FERTILIZE ONLY AS RECOMMENDED IN SOIL FERTILITY ANALYSIS.
11. UNDISTURBED NATIVE SOIL.
12. 4" HIGH EARTHEN WATERING BASIN.
13. FINISH GRADE.

NOTES:
1. SCARIFY SIDES OF PLANTING PIT PRIOR TO SETTING TREE.
2. REMOVE EXCESS SOIL APPLIED ON TOP OF THE ROOTBALL THAT COVERS THE ROOT FLARE. THE PLANTING HOLE DEPTH SHALL BE SUCH THAT THE ROOTBALL RESTS ON UNDISTURBED SOIL, AND THE ROOT FLARE IS 2"-4" ABOVE FINISH GRADE.
3. FOR B&B TREES, CUT OFF BOTTOM 1/3 OF WIRE BASKET BEFORE PLACING TREE IN HOLE, CUT OFF AND REMOVE REMAINDER OF BASKET AFTER TREE IS SET IN HOLE, REMOVE ALL NYLON TIES, TWINE, ROPE, AND OTHER PACKING MATERIAL. REMOVE AS MUCH BURLAP FROM AROUND ROOTBALL AS IS PRACTICAL.
4. REMOVE ALL NURSERY STAKES AFTER PLANTING.
5. FOR TREES 36" BOX/2.5" CAL. AND LARGER, USE THREE STAKES OR DEADMEN (AS APPROPRIATE), SPACED EVENLY AROUND TREE.
6. STAKING SHALL BE TIGHT ENOUGH TO PREVENT TRUNK FROM BENDING, BUT LOOSE ENOUGH TO ALLOW SOME TRUNK MOVEMENT IN WIND.

A — TREE PLANTING
SCALE: NOT TO SCALE

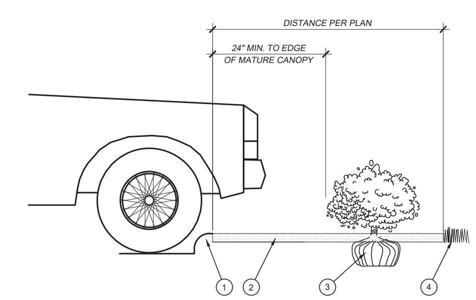

1. CURB.
2. MULCH LAYER.
3. PLANT.
4. TURF (WHERE SHOWN ON PLAN).

D — PLANTING AT PARKING AREA
SCALE: NOT TO SCALE

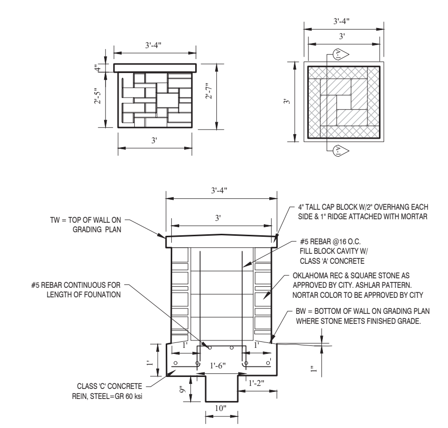

SECTION A-1: DETAIL
NOT TO SCALE

B — TxDOT COLUMN LANDSCAPE AMENITY
SCALE: NTS

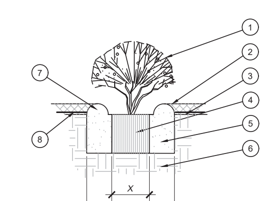

1. SHRUB, PERENNIAL, OR ORNAMENTAL GRASS.
2. MULCH, TYPE AND DEPTH PER PLANS. PLACE NO MORE THAN 1" OF MULCH WITHIN 6" OF PLANT CENTER.
3. FINISH GRADE.
4. ROOT BALL.
5. BACKFILL. AMEND AND FERTILIZE ONLY AS RECOMMENDED IN SOIL FERTILITY ANALYSIS.
6. UNDISTURBED NATIVE SOIL.
7. 3" HIGH EARTHEN WATERING BASIN.
8. WEED FABRIC UNDER MULCH.

E — SHRUB AND PERENNIAL PLANTING
SCALE: NTS

DATE: 6/14/18

EVERGREEN DESIGN GROUP
(800) 680-6630
15305 Dallas Pkwy., Ste 300
Addison, TX 75001
www.landscape-consultants.net

Rev.	Date	Comments	By

DYNAMIC ENGINEERING
(dba) MIDWEST DYNAMIC ENGINEERING CONSULTANTS, PC
LAND DEVELOPMENT CONSULTING • PERMITTING • GEOTECHNICAL • ENVIRONMENTAL • SURVEY • PLANNING & ZONING
Additional offices conveniently located at:
14521 Old Katy Road, Suite 250, Houston, TX 77079 T: 281.789.6400 | 901 Mopac Expressway South, Barton Oaks Plaza One, Suite 300, Austin, TX 78746 T:512.646.2646
1904 Main Street, Lake Como, NJ 07719 T: 732.974.0198 F: 732.974.3521 | 245 Main Street, Suite 110, Chester, NJ 07930 T: 908.879.9229 F: 908.879.0222
790 Newtown Yardley Road, Suite 425, PA 18940 T: 267.685.0276 F: 267.685.0361 | 8 Robbins Street, Suite 102, Toms River, NJ 08753 T: 732.974.0198 F: 732.974.3521
Texas Registered Engineering Firm No. F-13660
1301 Central Expressway South - Suite 210
Allen, TX 75013
T: 972.534.2100
www.dynamicec.com

TITLE: LANDSCAPE DETAILS AND SPECS

PROJECT: VPS
CHRYSLER DODGE JEEP RAM N. RICHLAND HILLS
LOT B, LOT 1C, BLOCK E, LOT 1R, BLOCK CR
7740 NE LOOP 820
CITY OF NORTH RICHLAND HILLS, TARRANT COUNTY, TEXAS

JOB No:	2320-99-007
DATE:	
DRAWN BY:	JWG
DESIGNED BY:	JWG
CHECKED BY:	RM
SCALE:	(H) AS (V) SHOWN
CONSTRUCTION CHECK	DATE
CONSTRUCTION CHECK	DATE
SHEET No:	3 (1 OF 3)
DEC Client Code:	2320
Rev. #	0

Plotted: 06/14/18 – 10:20 AM, By: Shaka Jazzbeaux, – Product Ver: 21.0s (LMS Tech)
File: C:\Users\Shaka Jazzbeaux\Dropbox (Rodney)\EDG – Shared\2018\North Richland Hills TX\CDJR\CDRJ Landscape 2018-06-08.dwg, ---> LP-3

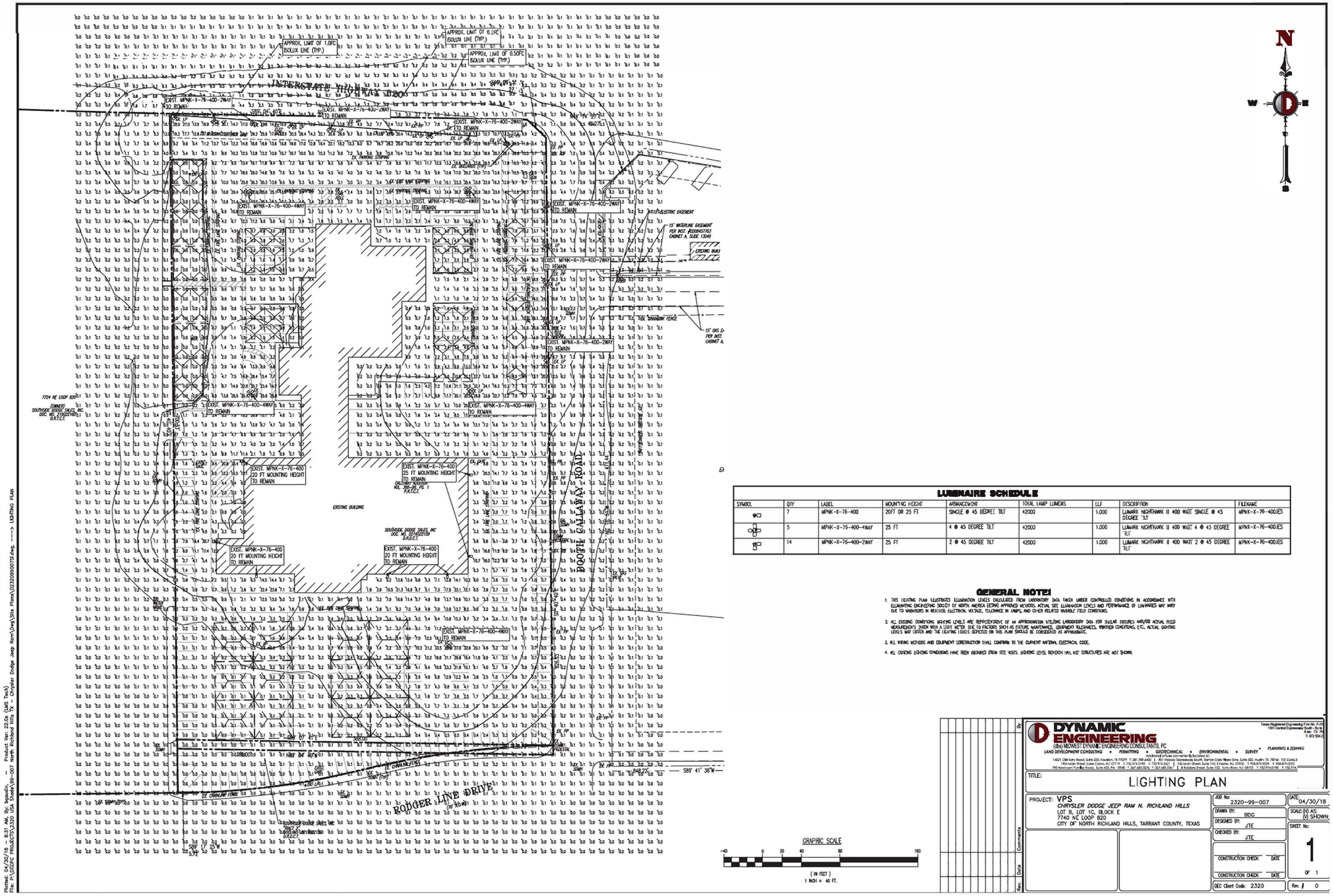

LUMINAIRE SCHEDULE

SYMBOL	QTY	LABEL	MOUNTING HEIGHT	ARRANGEMENT	TOTAL LAMP LUMENS	LLF	DESCRIPTION	FILENAME
	7	MPNK-X-76-400	20FT OR 25 FT	SINGLE @ 45 DEGREE TILT	42000	1.000	LUMARK NIGHTHAWK II 400 WATT SINGLE @ 45 DEGREE TILT	MPNK-X-76-400.IES
	5	MPNK-X-75-400-4WAY	25 FT	4 @ 45 DEGREE TILT	42000	1.000	LUMARK NIGHTHAWK II 400 WATT 4 @ 45 DEGREE TILT	MPNK-X-76-400.IES
	14	MPNK-X-76-400-2WAY	25 FT	2 @ 45 DEGREE TILT	42000	1.000	LUMARK NIGHTHAWK II 400 WATT 2 @ 45 DEGREE TILT	MPNK-X-76-400.IES

GENERAL NOTES

1. THIS LIGHTING PLAN ILLUSTRATES ILLUMINATION LEVELS CALCULATED FROM LABORATORY DATA TAKEN UNDER CONTROLLED CONDITIONS IN ACCORDANCE WITH ILLUMINATING ENGINEERING SOCIETY OF NORTH AMERICA (IESNA) APPROVED METHODS. ACTUAL SITE ILLUMINATION LEVELS AND PERFORMANCE OF LUMINAIRES MAY VARY DUE TO VARIATIONS IN NEARBY ELECTRICAL VOLTAGE, TOLERANCE IN LAMPS, AND OTHER RELATED VARIABLE FIELD CONDITIONS.
2. ALL EXISTING CONDITIONS WERE NOT LEVELS ARE REPRESENTATIVE OF AN APPROXIMATION UTILIZING LABORATORY DATA FOR SIMILAR FIXTURES AND/OR ACTUAL FIELD MEASUREMENTS TAKEN WITH A LIGHT METER DUE TO FACTORS SUCH AS FUTURE MAINTENANCE, EQUIPMENT TOLERANCES, WEATHER CONDITIONS, ETC., ACTUAL LIGHTING LEVELS MAY VARY AND THE LIGHTING LEVELS DEPICTED ON THIS PLAN SHOULD BE CONSIDERED AS APPROXIMATE.
3. ALL WIRING METHODS AND EQUIPMENT CONSTRUCTION SHALL CONFORM TO THE CURRENT NATIONAL ELECTRICAL CODE.
4. ALL EXISTING LIGHTING CONDITIONS HAVE BEEN OBTAINED FROM SITE VISITS. LIGHTING LEVEL BEYOND THIS NOT STRUCTURES ARE NOT SHOWN.

DYNAMIC ENGINEERING
(dba) MEDWEST DYNAMIC ENGINEERING CONSULTANTS, PC
LAND DEVELOPMENT CONSULTING • PERMITTING • GEOTECHNICAL • ENVIRONMENTAL • SURVEY • PLANNING & ZONING
Texas Registered Engineering Firm No. F-439
1301 Central Expressway South - Ste 34
Allen, Texas 75013
T: 972-534-2

TITLE: LIGHTING PLAN

PROJECT: VPS
CHRYSLER DODGE JEEP RAM N. RICHLAND HILLS
LOT B, LOT 1C, BLOCK E
7740 NE LOOP 820
CITY OF NORTH RICHLAND HILLS, TARRANT COUNTY, TEXAS

JOB No:	2320-99-007
DATE:	04/30/18
DRAWN BY:	BDG
SCALE:	(H) AS (V) SHOWN
DESIGNED BY:	JTE
CHECKED BY:	JTE
SHEET No:	1 OF 1
CONSTRUCTION CHECK	DATE
CONSTRUCTION CHECK	DATE
DEC Client Code:	2320
Rev. #	0

Rev. Date Comments By

Plotted: 04/30/18 - 8:31 AM, By: bgaudin, — Project Ver: 22.0a (LMS Tech)
File: P:\DEPC PROJECTS\2320 USA Stadium\99-007 North Richland Hills TX - Chrysler Dodge Jeep Ram\Dwg\Site Plans\2232099007SI.dwg, ----> LIGHTING PLAN

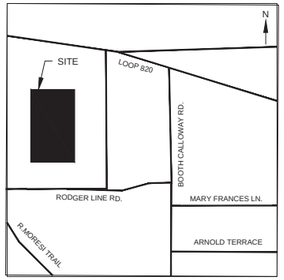

VICINITY MAP
N.T.S.

ADDRESS:

7724 NE LOOP 820
NORTH RICHLAND HILLS,TX 76180

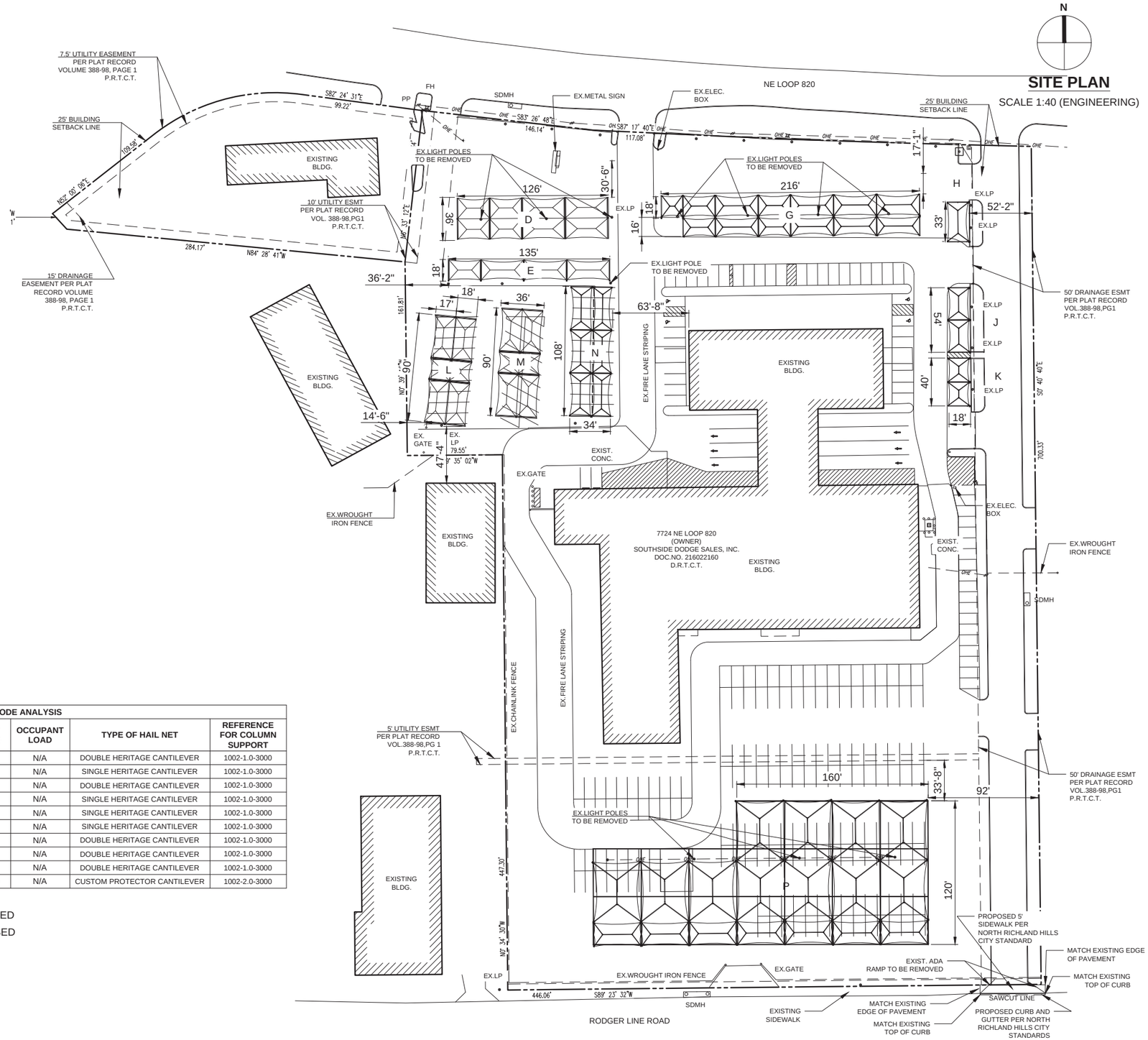

CODE ANALYSIS						
BUILDING	OCCUPANCY	CONSTRUCTION TYPE	AREA (SQF)	OCCUPANT LOAD	TYPE OF HAIL NET	REFERENCE FOR COLUMN SUPPORT
D	S2	2-B	4536	N/A	DOUBLE HERITAGE CANTILEVER	1002-1.0-3000
E	S2	2-B	2430	N/A	SINGLE HERITAGE CANTILEVER	1002-1.0-3000
G	S2	2-B	6750	N/A	DOUBLE HERITAGE CANTILEVER	1002-1.0-3000
H	S2	2-B	594	N/A	SINGLE HERITAGE CANTILEVER	1002-1.0-3000
J	S2	2-B	918	N/A	SINGLE HERITAGE CANTILEVER	1002-1.0-3000
K	S2	2-B	713	N/A	SINGLE HERITAGE CANTILEVER	1002-1.0-3000
L	S2	2-B	3150	N/A	DOUBLE HERITAGE CANTILEVER	1002-1.0-3000
M	S2	2-B	3240	N/A	DOUBLE HERITAGE CANTILEVER	1002-1.0-3000
N	S2	2-B	3780	N/A	DOUBLE HERITAGE CANTILEVER	1002-1.0-3000
P	S2	2-B	27600	N/A	CUSTOM PROTECTOR CANTILEVER	1002-2.0-3000

NOTE: EXISTING LIGHT POLES TO BE REMOVED
THAT ARE IN CONFLICT WITH PROPOSED
HAIL NETS

THESE PLANS AND SPECIFICATIONS ARE THE PROPERTY OF USA SHADE AND FABRIC STRUCTURES AND SHALL NOT BE REPRODUCED WITHOUT THEIR WRITTEN PERMISSION.

CORPORATE HEADQUARTERS
8505-A CHANCELLOR ROW
DALLAS, TX, 75247
800-966-5005

CERTIFICATIONS:
IAS CERTIFICATION No: FA-428
CLARK COUNTY MANUFACTURER CERTIFICATION NUMBER (NEVADA): 355

CUSTOMER:
AUTONATION INC.

PROJECT NAME:
HYUNDAI N.RICHLAND HILLS

LOCATION:
NORTH RICHLAND HILLS TX

PROJECT NUMBER.
63012

STRUCTURE TYPE:
HERITAGE CANTILEVERS & DIAMOND PROTECTORS

SIZE:
VARIOUS

SCALE : ENGINEERING

DRAWING SIZE: **D**

REV	DESCRIPTION	DATE	DRW	CHK	ENG
NC	RELEASE FOR FABRICATION	06/19/18	AK	SA	SA

Eng. By :	SA	06/19/18
Design By :	AK	06/19/18
Approved By :	SA	06/19/18

DRAWING DESCRIPTION:
SITE PLAN

DWG. **63012-1.10**

PAGE **4000**

REV. **NC**

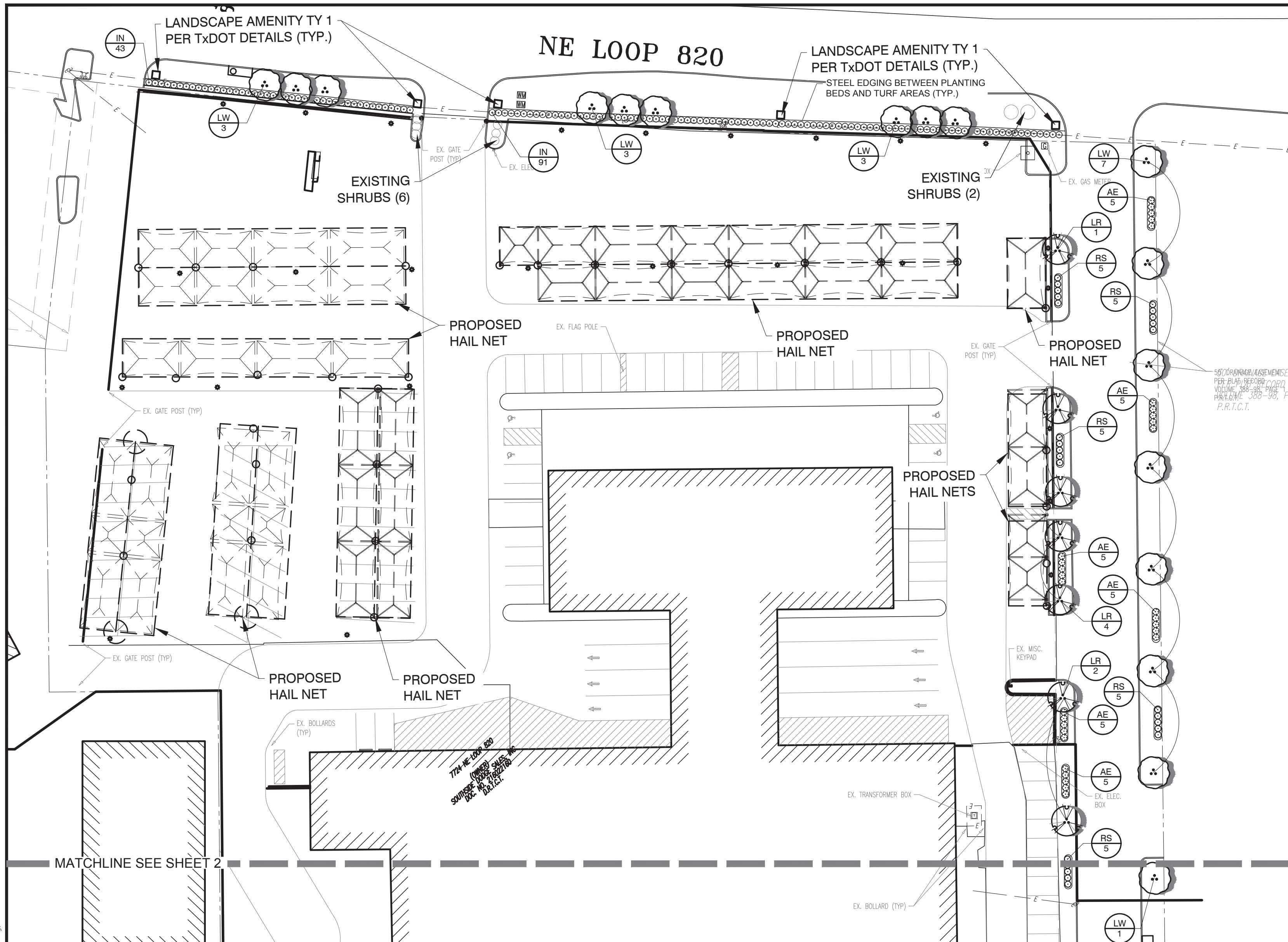

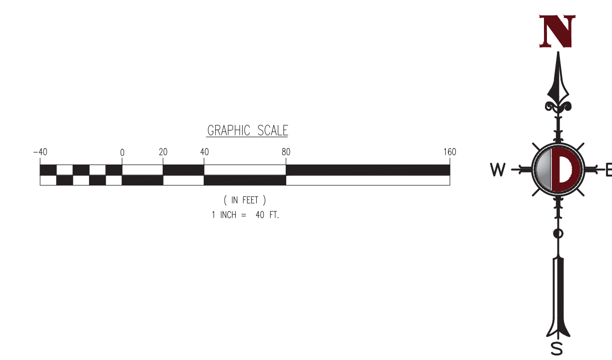

PLANT_SCHEDULE

TREES	CODE	BOTANICAL NAME / COMMON NAME	CONT	CAL	HEIGHT	QTY
	LW	Lagerstroemia indica `Watermelon Red` / Watermelon Red Crape Myrtle Multi trunk - 3-5 canes, 2" caliper overall.	30 gal	2"Cal	8`-10`	18
	LR	Lagerstroemia x `Tuscarora` / Red Crape Myrtle Multi trunk - 3-5 canes, 2" caliper overall.	30 gal	2"Cal		7
	UC	Ulmus crassifolia / Cedar Elm	B & B	3"Cal	10`-12`	9

SHRUBS	CODE	BOTANICAL NAME / COMMON NAME	SIZE	SPACING	QTY
	AE	Abelia x grandiflora `Edward Goucher` / Glossy Abelia	3 gal	36" o.c.	133
	IN	Ilex vomitoria `Nana` / Dwarf Yaupon	3 gal	36" o.c.	134
	RS	Rhaphiolepis indica `Snow White` / Snow White Indian Hawthorn	5 gal	36" o.c.	25

GENERAL LANDSCAPE NOTES

1. THE GENERAL CONTRACTOR IS RESPONSIBLE FOR REMOVING ALL EXISTING VEGETATION (EXCEPT WHERE NOTED TO REMAIN). BEFORE STARTING WORK, THE LANDSCAPE CONTRACTOR SHALL VERIFY THAT THE GRADE OF ALL LANDSCAPE AREAS ARE WITHIN +/-0.1' OF FINISH GRADE. THE LANDSCAPE CONTRACTOR SHALL NOTIFY THE OWNER IMMEDIATELY SHOULD ANY DISCREPANCIES EXIST. SEE SPECIFICATIONS FOR MORE DETAILED INSTRUCTION ON TURF AREA AND PLANTING BED PREPARATION.
2. THE LANDSCAPE CONTRACTOR SHALL CONSTRUCT AND MAINTAIN FINISH GRADES AS SHOWN ON GRADING PLANS, AND CONSTRUCT AND MAINTAIN SLOPES AS RECOMMENDED BY THE GEOTECHNICAL REPORT. ALL LANDSCAPE AREAS SHALL HAVE POSITIVE DRAINAGE AWAY FROM STRUCTURES AT THE MINIMUM SLOPE SPECIFIED IN THE REPORT, AND AREAS OF POTENTIAL PONDING SHALL BE REGRADED TO BLEND IN WITH THE SURROUNDING GRADES AND ELIMINATE PONDING POTENTIAL. SHOULD ANY CONFLICTS AND/OR DISCREPANCIES ARISE BETWEEN THE GRADING PLANS, GEOTECHNICAL REPORT, THESE NOTES, AND ACTUAL CONDITIONS, THE CONTRACTOR SHALL IMMEDIATELY BRING SUCH ITEMS TO THE ATTENTION OF THE LANDSCAPE ARCHITECT AND OWNER.
3. CONTRACTOR SHALL ENSURE THAT THE GRADE IN SOD AREAS SHALL BE 1" BELOW FINISH GRADE BEFORE INSTALLING SOIL AMENDMENTS, AND 2" BELOW FINISH GRADE IN SHRUB AREAS BEFORE INSTALLING SOIL AMENDMENTS. MULCH COVER WITHIN 6" OF CONCRETE WALKS AND CURBS SHALL NOT PROTRUDE ABOVE THE FINISH SURFACE OF THE WALKS AND CURBS. MULCH COVER WITHIN 12" OF WALLS SHALL BE AT LEAST 3" LOWER THAN THE TOP OF WALL.
4. INSTALL 5 OUNCE, WOVEN, NEEDLE-PUNCHED POLYPROPYLENE FABRIC UNDER ALL MULCHED AREAS AND INDIVIDUAL TREE RINGS.
5. INSTALL 3" THICK LAYER OF "RARE RED ROCK #1" GRAVEL MULCH TOPDRESSING, AS AVAILABLE FROM FULLER 5 LANDSCAPE SUPPLY, CUSSETA, ALABAMA, (888) 749-2880, IN ALL PLANTING BEDS.
6. INSTALL 14G, GREEN STEEL EDGING BETWEEN ALL PLANTING BEDS AND TURF AREAS, AND BETWEEN GROUNDCOVERS AND OTHER PLANTS (WHERE INDICATED ON THE PLAN).
7. HYDROMULCH ALL DISTURBED AREAS OUTSIDE OF PROPERTY LIMITS (UNLESS SHOWN AS SOD).
8. ALL PLANT LOCATIONS ARE DIAGRAMMATIC. ACTUAL LOCATIONS SHALL BE VERIFIED WITH THE LANDSCAPE ARCHITECT OR DESIGNER PRIOR TO PLANTING. THE LANDSCAPE CONTRACTOR SHALL ENSURE THAT ALL REQUIREMENTS OF THE PERMITTING AUTHORITY ARE MET (I.E., MINIMUM PLANT QUANTITIES, PLANTING METHODS, TREE PROTECTION METHODS, ETC.).
9. THE LANDSCAPE CONTRACTOR IS RESPONSIBLE FOR DETERMINING PLANT QUANTITIES; PLANT QUANTITIES SHOWN ON LEGENDS AND CALLOUTS ARE FOR GENERAL INFORMATION ONLY. IN THE EVENT OF A DISCREPANCY BETWEEN THE PLAN AND THE PLANT LEGEND, THE PLANT QUANTITY AS SHOWN ON THE PLAN (FOR INDIVIDUAL SYMBOLS) OR CALLOUT (FOR GROUNDCOVER PATTERNS) SHALL TAKE PRECEDENCE.
10. NO SUBSTITUTIONS OF PLANT MATERIALS SHALL BE ALLOWED. IF SOME OF THE PLANTS ARE NOT AVAILABLE, THE LANDSCAPE CONTRACTOR SHALL NOTIFY THE LANDSCAPE DESIGNER IN WRITING (VIA PROPER CHANNELS).
11. PLANTS MAY BE INSPECTED AND APPROVED OR REJECTED ON THE JOBSITE BY THE OWNER OR OWNER'S REPRESENTATIVE.
12. THE LANDSCAPE CONTRACTOR SHALL BE RESPONSIBLE FOR THE MAINTENANCE OF ALL WORK SHOWN ON THESE PLANS FOR 90 DAYS BEYOND FINAL ACCEPTANCE OF ALL LANDSCAPE WORK BY THE OWNER. LANDSCAPE MAINTENANCE SHALL INCLUDE WEEKLY SITE VISITS FOR THE FOLLOWING ACTIONS (AS APPROPRIATE): PROPER PRUNING, RESTAKING OF TREES, RESETTING OF PLANTS THAT HAVE SETTLED, MOWING AND AERATION OF LAWNS, WEEDING, RESEEDING AREAS WHICH HAVE NOT GERMINATED WELL, TREATING FOR INSECTS AND DISEASES,REPLACEMENT OF MULCH, REMOVAL OF LITTER, REPAIRS TO THE IRRIGATION SYSTEM DUE TO FAULTY PARTS AND/OR WORKMANSHIP, AND THE APPROPRIATE WATERING OF ALL PLANTINGS. THE LANDSCAPE CONTRACTOR SHALL MAINTAIN THE IRRIGATION SYSTEM IN PROPER WORKING ORDER, WITH SCHEDULING ADJUSTMENTS BY SEASON TO MAXIMIZE WATER CONSERVATION.
13. SHOULD SEEDED AND/OR SODDED AREAS NOT BE COVERED BY AN AUTOMATIC IRRIGATION SYSTEM, THE LANDSCAPE CONTRACTOR SHAL BE RESPONSIBLE FOR WATERING THESE AREAS AND OBTAINING A FULL STAND OF GRASS AT NO ADDITIONAL COST TO THE OWNER.
14. TO ACHIEVE FINAL ACCEPTANCE AT THE END OF THE MAINTENANCE PERIOD, ALL OF THE FOLLOWING CONDITIONS MUST OCCUR:
    A. THE LANDSCAPE SHALL SHOW ACTIVE, HEALTHY GROWTH (WITH EXCEPTIONS MADE FOR SEASONAL DORMANCY). ALL PLANTS NOT MEETING THIS CONDITION SHALL BE REJECTED AND REPLACED BY HEALTHY PLANT MATERIAL PRIOR TO FINAL ACCEPTANCE.
    B. ALL HARDSCAPE SHALL BE CLEANED PRIOR TO FINAL ACCEPTANCE.
    C. SODDED AREAS MUST BE ACTIVELY GROWING AND MUST REACH A MINIMUM HEIGHT OF 1 1/2 INCHES BEFORE FIRST MOWING. HYDROMULCHED AREAS SHALL SHOW ACTIVE, HEALTHY GROWTH. BARE AREAS LARGER THAN TWELVE SQUARE INCHES MUST BE RESODDED OR RESEEDED (AS APPROPRIATE) PRIOR TO FINAL ACCEPTANCE. ALL SODDED TURF SHALL BE NEATLY MOWED.
15. SEE SPECIFICATIONS AND DETAILS FOR FURTHER REQUIREMENTS.

ROOT BARRIERS

THE CONTRACTOR SHALL INSTALL ROOT BARRIERS NEAR ALL NEWLY-PLANTED TREES THAT ARE LOCATED WITHIN FIVE (5) FEET OF PAVING OR CURBS. ROOT BARRIERS SHALL BE "CENTURY" OR "DEEP-ROOT" 24" DEEP PANELS (OR EQUAL). BARRIERS SHALL BE LOCATED IMMEDIATELY ADJACENT TO HARDSCAPE. INSTALL PANELS PER MANUFACTURER'S RECOMMENDATIONS. UNDER NO CIRCUMSTANCES SHALL THE CONTRACTOR USE ROOT BARRIERS OF A TYPE THAT COMPLETELY ENCIRCLE THE ROOTBALL.

MULCHES

AFTER ALL PLANTING IS COMPLETE, CONTRACTOR SHALL INSTALL 4" THICK LAYER OF "RARE RED ROCK #1" GRAVEL MULCH TOPDRESSING, AS AVAILABLE FROM FULLER 5 LANDSCAPE SUPPLY, CUSSETA, ALABAMA, (888) 749-2880 (OR EQUAL), OVER LANDSCAPE FABRIC IN ALL PLANTING AREAS. CONTRACTOR SHALL SUBMIT SAMPLES OF ALL MULCHES TO LANDSCAPE ARCHITECT AND OWNER FOR APPROVAL PRIOR TO CONSTRUCTION. ABSOLUTELY NO EXPOSED GROUND SHALL BE LEFT SHOWING ANYWHERE ON THE PROJECT AFTER MULCH HAS BEEN INSTALLED.

LANDSCAPE CALCULATIONS

TOTAL SITE AREA:	338,307 SF
LANDSCAPE AREA REQUIRED:	50,746 SF (15% OF SITE AREA)
LANDSCAPE AREA PROVIDED:	7,296 SF (2.1% OF SITE AREA)
LANDSCAPE SETBACK	
15' LANDSCAPE SETBACK REQUIRED ADJACENT TO ROW	
NE LOOP 820	0' SETBACK PROVIDED
RODGER LINE RD	6' SETBACK PROVIDED
REQUIRED TREES IN SETBACK - 1 LARGE TREE PER 50'	
NE LOOP 820 206 FEET / 50 = 10.1 =11 TREES REQUIRED	11 TREES PROVIDED
RODGER LINE RD 446 FEET / 50 = 8.9 =9 TREES REQUIRED	9 TREES PROVIDED
REQUIRED SHRUBS IN SETBACK - 10 SHRUBS PER 50'	
NE LOOP 820 436 FEET / 50 x 10 = 87 SHRUBS REQUIRED	134 SHRUBS PROVIDED
RODGER LINE RD 446 FEET / 50 x 89 = 89 SHRUBS REQUIRED	106 SHRUBS PROVIDED
PARKING LOT SCREENING	
PARKING LOTS SHALL BE SCREENED WITH EVERGREEN SHRUBS PLACED AT 3 FEET O.C.	
NE LOOP 820	PROVIDED
RODGER LINE RD	PROVIDED
PARKING LOT LANDSCAPING	
ONE LARGE TREE PER 20 SPACES REQUIRED	
150 SPACES / 20 = 7.5 = 8 LARGE TREES	0 TREES PROVIDED
LANDSCAPE ENTRANCES SHALL BE PLANTED WITH SMALL SHRUBS	
NE LOOP 820	PROVIDED
RODGER LINE RD	PROVIDED
PARKING LOTS SHALL BE AT LEAST 5% LANDSCAPED	
222,581 SF x .05 = 11,129 SF LANDSCAPING REQUIRED	430 SF PROVIDED

DATE: 6/29/2018

EVERGREEN
DESIGN GROUP
(800) 680-6630
15305 Dallas Pkwy., Ste 300
Addison, TX 75001
www.landscape-consultants.net

Case SUP 2018-02

Rev. | Date | Comments | By

DYNAMIC ENGINEERING
(dba) MIDWEST DYNAMIC ENGINEERING CONSULTANTS, PC
LAND DEVELOPMENT CONSULTING • PERMITTING • GEOTECHNICAL • ENVIRONMENTAL • SURVEY • PLANNING & ZONING
Additional offices conveniently located at:
14521 Old Katy Road, Suite 250, Houston, TX 77079 T: 281.789.6400 | 901 Mopac Expressway South, Barton Oaks Plaza One, Suite 300, Austin, TX 78746 T:512.646.2646
1904 Main Street, Lake Como, NJ 07719 T: 732.974.0198 F: 732.974.3521 | 245 Main Street, Suite 110, Chester, NJ 07930 T: 908.879.9229 F: 908.879.0222
790 Newtown Yardley Road, Suite 425, PA 18940 T: 267.685.0276 F: 267.685.0361 | 8 Robbins Street, Suite 102, Toms River, NJ 08753 T: 732.974.0198 F: 732.974.3521

Texas Registered Engineering Firm No. F-13660
1301 Central Expressway South - Suite 210
Allen, TX 75013
T: 972.534.2100
www.dynamicec.com

TITLE: LANDSCAPE PLAN

PROJECT: VPS
HYUNDAI N. RICHLAND HILLS
LOT A3, AR1A
7724 NE LOOP 820
CITY OF NORTH RICHLAND HILLS

JOB No: XXXX-XX-XXX
DATE: 6/29/2018
DRAWN BY: JWG
SCALE: (H) AS (V) SHOWN
DESIGNED BY: JWG
CHECKED BY: RM
SHEET No: 1
1 OF 3
CONSTRUCTION CHECK DATE
CONSTRUCTION CHECK DATE
DEC Client Code: XXXX
Rev. # 0

Plotted: 06/29/18 - 9:24 AM, By: , - Product Ver: $(GETVAR,??)
File: /Users/kenn/Dropbox (Rodney)/EDG - Shared/2018/North Richland Hills TX/Hyundai/Site Plan - 2018-06-29 Landscape.dwg, ---> LP-1

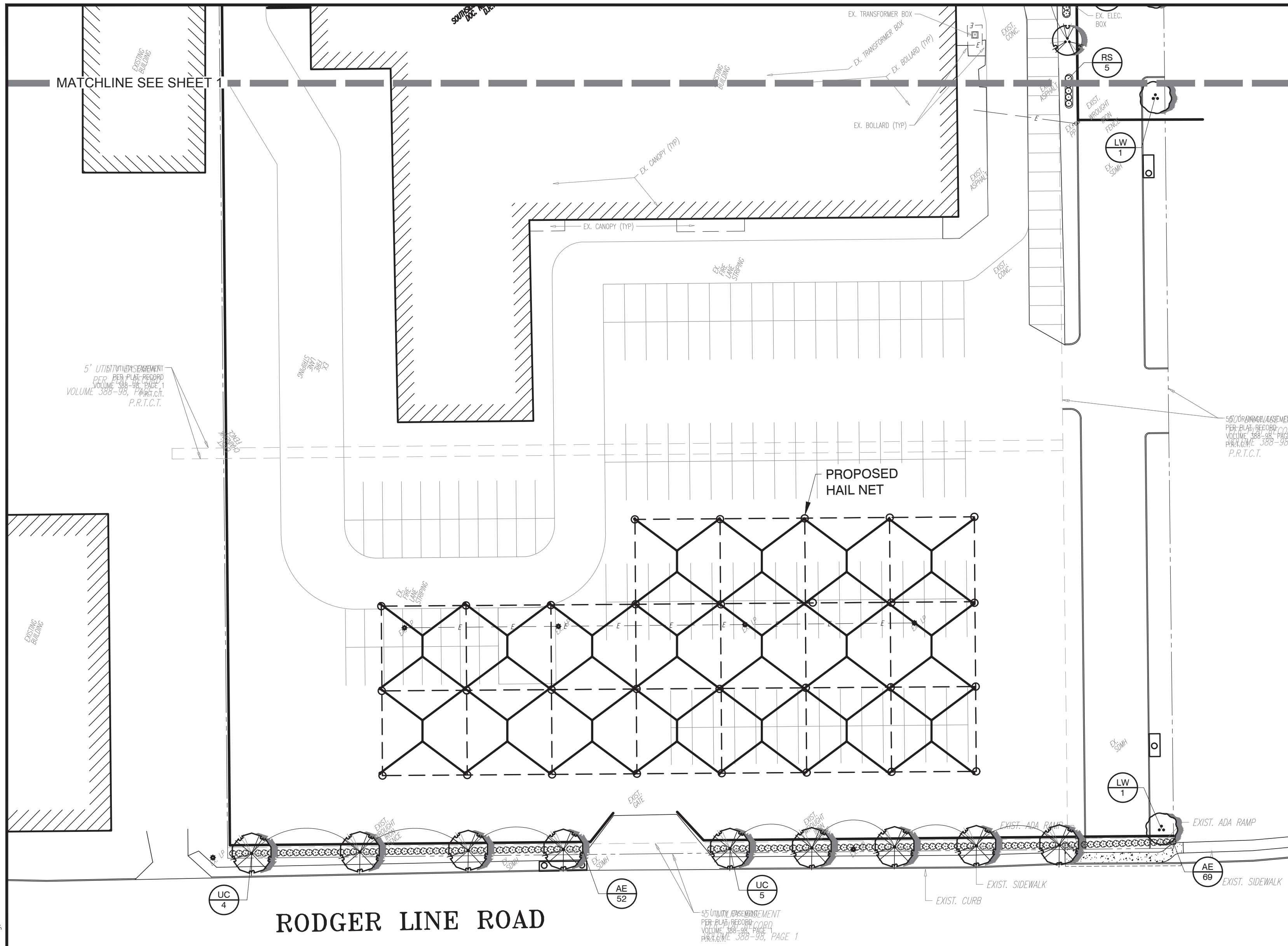

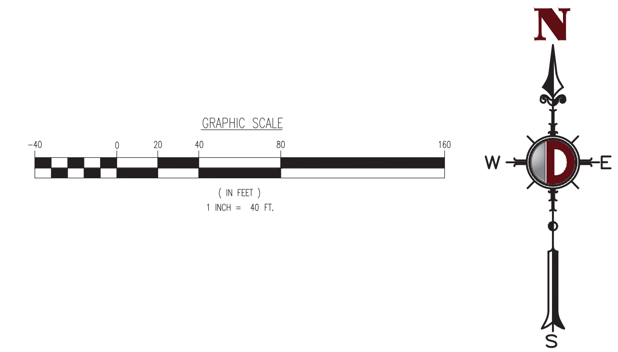

PLANT_SCHEDULE

TREES	CODE	BOTANICAL NAME / COMMON NAME	CONT	CAL	HEIGHT	QTY
	LW	Lagerstroemia indica `Watermelon Red` / Watermelon Red Crape Myrtle Multi trunk - 3-5 canes, 2" caliper overall.	30 gal	2"Cal	8`-10`	18
	LR	Lagerstroemia x `Tuscarora` / Red Crape Myrtle Multi trunk - 3-5 canes, 2" caliper overall.	30 gal	2"Cal		7
	UC	Ulmus crassifolia / Cedar Elm	B & B	3"Cal	10`-12`	9

SHRUBS	CODE	BOTANICAL NAME / COMMON NAME	SIZE	SPACING	QTY
	AE	Abelia x grandiflora `Edward Goucher` / Glossy Abelia	3 gal	36" o.c.	145
	IN	Ilex vomitoria `Nana` / Dwarf Yaupon	3 gal	36" o.c.	134
	RS	Rhaphiolepis indica `Snow White` / Snow White Indian Hawthorn	5 gal	36" o.c.	25

GENERAL LANDSCAPE NOTES

1. THE GENERAL CONTRACTOR IS RESPONSIBLE FOR REMOVING ALL EXISTING VEGETATION (EXCEPT WHERE NOTED TO REMAIN). BEFORE STARTING WORK, THE LANDSCAPE CONTRACTOR SHALL VERIFY THAT THE GRADE OF ALL LANDSCAPE AREAS ARE WITHIN +/-0.1' OF FINISH GRADE. THE LANDSCAPE CONTRACTOR SHALL NOTIFY THE OWNER IMMEDIATELY SHOULD ANY DISCREPANCIES EXIST. SEE SPECIFICATIONS FOR MORE DETAILED INSTRUCTION ON TURF AREA AND PLANTING BED PREPARATION.
2. THE LANDSCAPE CONTRACTOR SHALL CONSTRUCT AND MAINTAIN FINISH GRADES AS SHOWN ON GRADING PLANS, AND CONSTRUCT AND MAINTAIN SLOPES AS RECOMMENDED BY THE GEOTECHNICAL REPORT. ALL LANDSCAPE AREAS SHALL HAVE POSITIVE DRAINAGE AWAY FROM STRUCTURES AT THE MINIMUM SLOPE SPECIFIED IN THE REPORT, AND AREAS OF POTENTIAL PONDING SHALL BE REGRADED TO BLEND IN WITH THE SURROUNDING GRADES AND ELIMINATE PONDING POTENTIAL. SHOULD ANY CONFLICTS AND/OR DISCREPANCIES ARISE BETWEEN THE GRADING PLANS, GEOTECHNICAL REPORT, THESE NOTES, AND ACTUAL CONDITIONS, THE CONTRACTOR SHALL IMMEDIATELY BRING SUCH ITEMS TO THE ATTENTION OF THE LANDSCAPE ARCHITECT AND OWNER.
3. CONTRACTOR SHALL ENSURE THAT THE GRADE IN SOD AREAS SHALL BE 1" BELOW FINISH GRADE BEFORE INSTALLING SOIL AMENDMENTS, AND 2" BELOW FINISH GRADE IN SHRUB AREAS BEFORE INSTALLING SOIL AMENDMENTS. MULCH COVER WITHIN 6" OF CONCRETE WALKS AND CURBS SHALL NOT PROTRUDE ABOVE THE FINISH SURFACE OF THE WALKS AND CURBS. MULCH COVER WITHIN 12" OF WALLS SHALL BE AT LEAST 3" LOWER THAN THE TOP OF WALL.
4. INSTALL 5 OUNCE, WOVEN, NEEDLE-PUNCHED POLYPROPYLENE FABRIC UNDER ALL MULCHED AREAS AND INDIVIDUAL TREE RINGS.
5. INSTALL 3" THICK LAYER OF "RARE RED ROCK #1" GRAVEL MULCH TOPDRESSING, AS AVAILABLE FROM FULLER 5 LANDSCAPE SUPPLY, CUSSETA, ALABAMA, (888) 749-2880, IN ALL PLANTING BEDS.
6. INSTALL 14G, GREEN STEEL EDGING BETWEEN ALL PLANTING BEDS AND TURF AREAS, AND BETWEEN GROUNDCOVERS AND OTHER PLANTS (WHERE INDICATED ON THE PLAN).
7. HYDROMULCH ALL DISTURBED AREAS OUTSIDE OF PROPERTY LIMITS (UNLESS SHOWN AS SOD).
8. ALL PLANT LOCATIONS ARE DIAGRAMMATIC. ACTUAL LOCATIONS SHALL BE VERIFIED WITH THE LANDSCAPE ARCHITECT OR DESIGNER PRIOR TO PLANTING. THE LANDSCAPE CONTRACTOR SHALL ENSURE THAT ALL REQUIREMENTS OF THE PERMITTING AUTHORITY ARE MET (I.E., MINIMUM PLANT QUANTITIES, PLANTING METHODS, TREE PROTECTION METHODS, ETC.).
9. THE LANDSCAPE CONTRACTOR IS RESPONSIBLE FOR DETERMINING PLANT QUANTITIES; PLANT QUANTITIES SHOWN ON LEGENDS AND CALLOUTS ARE FOR GENERAL INFORMATION ONLY. IN THE EVENT OF A DISCREPANCY BETWEEN THE PLAN AND THE PLANT LEGEND, THE PLANT QUANTITY AS SHOWN ON THE PLAN (FOR INDIVIDUAL SYMBOLS) OR CALLOUT (FOR GROUNDCOVER PATTERNS) SHALL TAKE PRECEDENCE.
10. NO SUBSTITUTIONS OF PLANT MATERIALS SHALL BE ALLOWED. IF SOME OF THE PLANTS ARE NOT AVAILABLE, THE LANDSCAPE CONTRACTOR SHALL NOTIFY THE LANDSCAPE DESIGNER IN WRITING (VIA PROPER CHANNELS).
11. PLANTS MAY BE INSPECTED AND APPROVED OR REJECTED ON THE JOBSITE BY THE OWNER OR OWNER'S REPRESENTATIVE.
12. THE LANDSCAPE CONTRACTOR SHALL BE RESPONSIBLE FOR THE MAINTENANCE OF ALL WORK SHOWN ON THESE PLANS FOR 90 DAYS BEYOND FINAL ACCEPTANCE OF ALL LANDSCAPE WORK BY THE OWNER. LANDSCAPE MAINTENANCE SHALL INCLUDE WEEKLY SITE VISITS FOR THE FOLLOWING ACTIONS (AS APPROPRIATE): PROPER PRUNING, RESTAKING OF TREES, RESETTING OF PLANTS THAT HAVE SETTLED, MOWING AND AERATION OF LAWNS, WEEDING, RESEEDING AREAS WHICH HAVE NOT GERMINATED WELL, TREATING FOR INSECTS AND DISEASES,REPLACEMENT OF MULCH, REMOVAL OF LITTER, REPAIRS TO THE IRRIGATION SYSTEM DUE TO FAULTY PARTS AND/OR WORKMANSHIP, AND THE APPROPRIATE WATERING OF ALL PLANTINGS. THE LANDSCAPE CONTRACTOR SHALL MAINTAIN THE IRRIGATION SYSTEM IN PROPER WORKING ORDER, WITH SCHEDULING ADJUSTMENTS BY SEASON TO MAXIMIZE WATER CONSERVATION.
13. SHOULD SEEDED AND/OR SODDED AREAS NOT BE COVERED BY AN AUTOMATIC IRRIGATION SYSTEM, THE LANDSCAPE CONTRACTOR SHAL BE RESPONSIBLE FOR WATERING THESE AREAS AND OBTAINING A FULL STAND OF GRASS AT NO ADDITIONAL COST TO THE OWNER.
14. TO ACHIEVE FINAL ACCEPTANCE AT THE END OF THE MAINTENANCE PERIOD, ALL OF THE FOLLOWING CONDITIONS MUST OCCUR:
    A. THE LANDSCAPE SHALL SHOW ACTIVE, HEALTHY GROWTH (WITH EXCEPTIONS MADE FOR SEASONAL DORMANCY). ALL PLANTS NOT MEETING THIS CONDITION SHALL BE REJECTED AND REPLACED BY HEALTHY PLANT MATERIAL PRIOR TO FINAL ACCEPTANCE.
    B. ALL HARDSCAPE SHALL BE CLEANED PRIOR TO FINAL ACCEPTANCE.
    C. SODDED AREAS MUST BE ACTIVELY GROWING AND MUST REACH A MINIMUM HEIGHT OF 1 1/2 INCHES BEFORE FIRST MOWING. HYDROMULCHED AREAS SHALL SHOW ACTIVE, HEALTHY GROWTH. BARE AREAS LARGER THAN TWELVE SQUARE INCHES MUST BE RESODDED OR RESEEDED (AS APPROPRIATE) PRIOR TO FINAL ACCEPTANCE. ALL SODDED TURF SHALL BE NEATLY MOWED.
15. SEE SPECIFICATIONS AND DETAILS FOR FURTHER REQUIREMENTS.

ROOT BARRIERS

THE CONTRACTOR SHALL INSTALL ROOT BARRIERS NEAR ALL NEWLY-PLANTED TREES THAT ARE LOCATED WITHIN FIVE (5) FEET OF PAVING OR CURBS. ROOT BARRIERS SHALL BE "CENTURY" OR "DEEP-ROOT" 24" DEEP PANELS (OR EQUAL). BARRIERS SHALL BE LOCATED IMMEDIATELY ADJACENT TO HARDSCAPE. INSTALL PANELS PER MANUFACTURER'S RECOMMENDATIONS. UNDER NO CIRCUMSTANCES SHALL THE CONTRACTOR USE ROOT BARRIERS OF A TYPE THAT COMPLETELY ENCIRCLE THE ROOTBALL.

MULCHES

AFTER ALL PLANTING IS COMPLETE, CONTRACTOR SHALL INSTALL 4" THICK LAYER OF "RARE RED ROCK #1" GRAVEL MULCH TOPDRESSING, AS AVAILABLE FROM FULLER 5 LANDSCAPE SUPPLY, CUSSETA, ALABAMA, (888) 749-2880 (OR EQUAL), OVER LANDSCAPE FABRIC IN ALL PLANTING AREAS. CONTRACTOR SHALL SUBMIT SAMPLES OF ALL MULCHES TO LANDSCAPE ARCHITECT AND OWNER FOR APPROVAL PRIOR TO CONSTRUCTION. ABSOLUTELY NO EXPOSED GROUND SHALL BE LEFT SHOWING ANYWHERE ON THE PROJECT AFTER MULCH HAS BEEN INSTALLED.

LANDSCAPE CALCULATIONS

TOTAL SITE AREA:	338,307 SF
LANDSCAPE AREA REQUIRED:	50,746 SF (15% OF SITE AREA)
LANDSCAPE AREA PROVIDED:	7,296 SF (2.1% OF SITE AREA)
LANDSCAPE SETBACK	
15' LANDSCAPE SETBACK REQUIRED ADJACENT TO ROW	
NE LOOP 820	0' SETBACK PROVIDED
RODGER LINE RD	6' SETBACK PROVIDED
REQUIRED TREES IN SETBACK - 1 LARGE TREE PER 50'	
NE LOOP 820 206 FEET / 50 = 10.1 =11 TREES REQUIRED	11 TREES PROVIDED
RODGER LINE RD 446 FEET / 50 = 8.9 =9 TREES REQUIRED	9 TREES PROVIDED
REQUIRED SHRUBS IN SETBACK - 10 SHRUBS PER 50'	
NE LOOP 820 436 FEET / 50 x 10 = 87 SHRUBS REQUIRED	134 SHRUBS PROVIDED
RODGER LINE RD 446 FEET / 50 x 89 = 89 SHRUBS REQUIRED	121 SHRUBS PROVIDED
PARKING LOT SCREENING	
PARKING LOTS SHALL BE SCREENED WITH EVERGREEN SHRUBS PLACED AT 3 FEET O.C.	
NE LOOP 820	PROVIDED
RODGER LINE RD	PROVIDED
PARKING LOT LANDSCAPING	
ONE LARGE TREE PER 20 SPACES REQUIRED	
150 SPACES / 20 = 7.5 = 8 LARGE TREES	0 TREES PROVIDED
LANDSCAPE ENTRANCES SHALL BE PLANTED WITH SMALL SHRUBS	
NE LOOP 820	PROVIDED
RODGER LINE RD	PROVIDED
PARKING LOTS SHALL BE AT LEAST 5% LANDSCAPED	
222,581 SF x .05 = 11,129 SF LANDSCAPING REQUIRED	430 SF PROVIDED

DATE: 6/29/2018

(800) 680-6630
15305 Dallas Pkwy., Ste 300
Addison, TX 75001
www.landscape-consultants.net

Case SUP 2018-02

DYNAMIC ENGINEERING
(dba) MIDWEST DYNAMIC ENGINEERING CONSULTANTS, PC
LAND DEVELOPMENT CONSULTING • PERMITTING • GEOTECHNICAL • ENVIRONMENTAL • SURVEY • PLANNING & ZONING

Texas Registered Engineering Firm No. F-13660
1301 Central Expressway South - Suite 210
Allen, TX 75013
T: 972.534.2100
www.dynamicec.com

Additional offices conveniently located at:
14521 Old Katy Road, Suite 250, Houston, TX 77079 T: 281.789.6400 | 901 Mopac Expressway South, Barton Oaks Plaza One, Suite 300, Austin, TX 78746 T:512.646.2646
1904 Main Street, Lake Como, NJ 07719 T: 732.974.0198 F: 732.974.3521 | 245 Main Street, Suite 110, Chester, NJ 07930 T: 908.879.9229 F: 908.879.0222
790 Newtown Yardley Road, Suite 425, PA 18940 T: 267.685.0276 F: 267.685.0361 | 8 Robbins Street, Suite 102, Toms River, NJ 08753 T: 732.974.0198 F: 732.974.3521

TITLE: LANDSCAPE PLAN

PROJECT: VPS
HYUNDAI N. RICHLAND HILLS
LOT A3, AR1A
7724 NE LOOP 820
CITY OF NORTH RICHLAND HILLS

JOB No:	XXXX-XX-XXX
DATE:	6/29/18
DRAWN BY:	JWG
DESIGNED BY:	JWG
CHECKED BY:	RM
SCALE:	(H) AS (V) SHOWN
SHEET No:	2 (2 OF 3)
CONSTRUCTION CHECK	DATE
CONSTRUCTION CHECK	DATE
DEC Client Code:	XXXX
Rev. #	0

Rev.	Date	Comments	By

Plotted: 06/29/18 - 3:32 PM, By: , - Product Ver: $(GETVAR,??)
File: /Users/kenn/Dropbox (Rodney)/EDG - Shared/2018/North Richland Hills TX/Hyundai/Site Plan - 2018-06-29 Landscape.dwg, ---> LP-1

PLANTING SPECIFICATIONS

GENERAL

A. QUALIFICATIONS OF LANDSCAPE CONTRACTOR
1. ALL LANDSCAPE WORK SHOWN ON THESE PLANS SHALL BE PERFORMED BY A SINGLE FIRM SPECIALIZING IN LANDSCAPE PLANTING.
2. A LIST OF SUCCESSFULLY COMPLETED PROJECTS OF THIS TYPE, SIZE AND NATURE MAY BE REQUESTED BY THE OWNER FOR FURTHER QUALIFICATION MEASURES.
3. THE LANDSCAPE CONTRACTOR SHALL HOLD A VALID NURSERY AND FLORAL CERTIFICATE ISSUED BY THE TEXAS DEPARTMENT OF AGRICULTURE, AS WELL AS OPERATE UNDER A COMMERCIAL PESTICIDE APPLICATOR LICENSE ISSUED BY EITHER THE TEXAS DEPARTMENT OF AGRICULTURE OR THE TEXAS STRUCTURAL PEST CONTROL BOARD.

B. SCOPE OF WORK
1. WORK COVERED BY THESE SECTIONS INCLUDES THE FURNISHING AND PAYMENT OF ALL MATERIALS, LABOR, SERVICES, EQUIPMENT, LICENSES, TAXES AND ANY OTHER ITEMS THAT ARE NECESSARY FOR THE EXECUTION, INSTALLATION AND COMPLETION OF ALL WORK, SPECIFIED HEREIN AND / OR SHOWN ON THE LANDSCAPE PLANS, NOTES, AND DETAILS.
2. ALL WORK SHALL BE PERFORMED IN ACCORDANCE WITH ALL APPLICABLE LAWS, CODES AND REGULATIONS REQUIRED BY AUTHORITIES HAVING JURISDICTION OVER SUCH WORK, INCLUDING ALL INSPECTIONS AND PERMITS REQUIRED BY FEDERAL, STATE AND LOCAL AUTHORITIES IN SUPPLY, TRANSPORTATION AND INSTALLATION OF MATERIALS.
3. THE LANDSCAPE CONTRACTOR SHALL VERIFY THE LOCATION OF ALL UNDERGROUND UTILITY LINES (WATER, SEWER, ELECTRICAL, TELEPHONE, GAS, CABLE, TELEVISION, ETC.) PRIOR TO THE START OF ANY WORK.

PRODUCTS

A. ALL MANUFACTURED PRODUCTS SHALL BE NEW.

B. CONTAINER AND BALLED-AND-BURLAPPED PLANTS:
1. FURNISH NURSERY-GROWN PLANTS COMPLYING WITH ANSI Z60.1-2004. PROVIDE WELL-SHAPED, FULLY BRANCHED, HEALTHY, VIGOROUS STOCK FREE OF DISEASE, INSECTS, EGGS, LARVAE, AND DEFECTS SUCH AS KNOTS, SUN SCALD, INJURIES, ABRASIONS, AND DISFIGUREMENT. ALL PLANTS WITHIN A SPECIES SHALL HAVE SIMILAR SIZE, AND SHALL BE OF A FORM TYPICAL FOR THE SPECIES. ALL TREES SHALL BE OBTAINED FROM SOURCES WITHIN 200 MILES OF THE PROJECT SITE, AND WITH SIMILAR CLIMACTIC CONDITIONS.
2. ROOT SYSTEMS SHALL BE HEALTHY, DENSELY BRANCHED ROOT SYSTEMS, NON-POT-BOUND, FREE FROM ENCIRCLING AND/OR GIRDLING ROOTS, AND FREE FROM ANY OTHER ROOT DEFECTS (SUCH AS J-SHAPED ROOTS).
3. ANY PLANT DEEMED UNACCEPTABLE BY THE LANDSCAPE ARCHITECT OR OWNER SHALL BE IMMEDIATELY REMOVED FROM THE SITE AND SHALL BE REPLACED WITH AN ACCEPTBLE PLANT OF LIKE TYPE AND SIZE AT THE CONTRACTOR'S OWN EXPENSE. ANY PLANTS APPEARING TO BE UNHEALTHY, EVEN IF DETERMINED TO STILL BE ALIVE, SHALL NOT BE ACCEPTED. THE LANDSCAPE ARCHITECT AND OWNER SHALL BE THE SOLE JUDGES AS TO THE ACCEPTABILITY OF PLANT MATERIAL.
4. ALL TREES SHALL BE STANDARD IN FORM, UNLESS OTHERWISE SPECIFIED. TREES WITH CENTRAL LEADERS WILL NOT BE ACCEPTED IF LEADER IS DAMAGED OR REMOVED. PRUNE ALL DAMAGED TWIGS AFTER PLANTING.
5. CALIPER MEASUREMENTS FOR STANDARD (SINGLE TRUNK) TREES SHALL BE AS FOLLOWS: SIX INCHES ABOVE THE ROOT FLARE FOR TREES UP TO AND INCLUDING FOUR INCHES IN CALIPER, AND TWELVE INCHES ABOVE THE ROOT FLARE FOR TREES EXCEEDING FOUR INCHES IN CALIPER.
6. MULTI-TRUNK TREES SHALL BE MEASURED BY THEIR OVERALL HEIGHT, MEASURED FROM THE TOP OF THE ROOT BALL.
7. ANY TREE OR SHRUB SHOWN TO HAVE EXCESS SOIL PLACED ON TOP OF THE ROOT BALL, SO THAT THE ROOT FLARE HAS BEEN COMPLETELY COVERED, SHALL BE REJECTED.

C. SOD: PROVIDE WELL-ROOTED SOD OF THE VARIETY NOTED ON THE PLANS. SOD SHALL BE CUT FROM HEALTHY, MATURE TURF WITH SOIL THICKNESS OF 3/4" TO 1". EACH PALLET OF SOD SHALL BE ACCOMPANIED BY A CERTIFICATE FROM SUPPLIER STATING THE COMPOSITION OF THE SOD.

D. SEED: PROVIDE BLEND OF SPECIES AND VARIETIES AS NOTED ON THE PLANS, WITH MAXIMUM PERCENTAGES OF PURITY, GERMINATION, AND MINIMUM PERCENTAGE OF WEED SEED AS INDICATED ON PLANS. EACH BAG OF SEED SHALL BE ACCOMPANIED BY A TAG FROM THE SUPPLIER INDICATING THE COMPOSITION OF THE SEED.

E. TOPSOIL: SANDY TO CLAY LOAM TOPSOIL, FREE OF STONES LARGER THAN ½ INCH, FOREIGN MATTER, PLANTS, ROOTS, AND SEEDS.

F. COMPOST: WELL-COMPOSTED, STABLE, AND WEED-FREE ORGANIC MATTER, pH RANGE OF 5.5 TO 8; MOISTURE CONTENT 35 TO 55 PERCENT BY WEIGHT; 100 PERCENT PASSING THROUGH 3/4-INCH SIEVE; SOLUBLE SALT CONTENT OF 5 TO 10 DECISIEMENS/M; NOT EXCEEDING 0.5 PERCENT INERT CONTAMINANTS AND FREE OF SUBSTANCES TOXIC TO PLANTINGS. NO MANURE OR ANIMAL-BASED PRODUCTS SHALL BE USED.

G. FERTILIZER: GRANULAR FERTILIZER CONSISTING OF NITROGEN, PHOSPHORUS, POTASSIUM, AND OTHER NUTRIENTS IN PROPORTIONS, AMOUNTS, AND RELEASE RATES RECOMMENDED IN A SOIL REPORT FROM A QUALIFIED SOIL-TESTING AGENCY (SEE BELOW).

H. MULCH: SIZE AND TYPE AS INDICATED ON PLANS, FREE FROM DELETERIOUS MATERIALS AND SUITABLE AS A TOP DRESSING OF TREES AND SHRUBS.

I. WEED FABRIC: 5 OUNCE, WOVEN, NEEDLE-PUNCHED FABRIC, SUCH AS DEWITT PRO5 LANDSCAPE FABRIC (OR APPROVED EQUAL).

J. TREE STAKING AND GUYING
1. STAKES: 6' LONG GREEN METAL T-POSTS.
2. GUY AND TIE WIRE: ASTM A 641, CLASS 1, GALVANIZED-STEEL WIRE, 2-STRAND, TWISTED, 0.106 INCH DIAMETER.
3. STRAP CHAFING GUARD: REINFORCED NYLON OR CANVAS AT LEAST 1-1/2 INCH WIDE, WITH GROMMETS TO PROTECT TREE TRUNKS FROM DAMAGE.

K. STEEL EDGING: PROFESSIONAL STEEL EDGING, 14 GAUGE THICK X 4 INCHES WIDE, FACTORY PAINTED DARK GREEN. ACCEPTABLE MANUFACTURERS INCLUDE COL-MET OR APPROVED EQUAL.

L. PRE-EMERGENT HERBICIDES: ANY GRANULAR, NON-STAINING PRE-EMERGENT HERBICIDE THAT IS LABELED FOR THE SPECIFIC ORNAMENTALS OR TURF ON WHICH IT WILL BE UTILIZED. PRE-EMERGENT HERBICIDES SHALL BE APPLIED PER THE MANUFACTURER'S LABELED RATES.

METHODS

A. SOIL PREPARATION
1. BEFORE STARTING WORK, THE LANDSCAPE CONTRACTOR SHALL VERIFY THAT THE GRADE OF ALL LANDSCAPE AREAS ARE WITHIN +/-0.1' OF FINISH GRADE. THE CONTRACTOR SHALL NOTIFY THE OWNER IMMEDIATELY SHOULD ANY DISCREPANCIES EXIST.
2. SOIL TESTING:
   a. AFTER FINISH GRADES HAVE BEEN ESTABLISHED, CONTRACTOR SHALL HAVE SOIL SAMPLES TESTED BY AN ESTABLISHED SOIL TESTING LABORATORY FOR THE FOLLOWING: SOIL TEXTURAL CLASS, GENERAL SOIL FERTILITY, pH, ORGANIC MATTER CONTENT, SALT (CEC), LIME, SODIUM ADSORPTION RATIO (SAR) AND BORON CONTENT. EACH SAMPLE SUBMITTED SHALL CONTAIN NO LESS THAN ONE QUART OF SOIL.
   b. CONTRACTOR SHALL ALSO SUBMIT THE PROJECT'S PLANT LIST TO THE LABORATORY ALONG WITH THE SOIL SAMPLES.
   c. THE SOIL REPORT PRODUCED BY THE LABORATORY SHALL CONTAIN RECOMMENDATIONS FOR THE FOLLOWING (AS APPROPRIATE): GENERAL SOIL PREPARATION AND BACKFILL MIXES, PRE-PLANT FERTILIZER APPLICATIONS, AND ANY OTHER SOIL RELATED ISSUES. THE REPORT SHALL ALSO PROVIDE A FERTILIZER PROGRAM FOR THE ESTABLISHMENT PERIOD AND FOR LONG-TERM MAINTENANCE.
3. THE CONTRACTOR SHALL INSTALL SOIL AMENDMENTS AND FERTILIZERS PER THE SOILS REPORT RECOMMENDATIONS. ANY CHANGE IN COST DUE TO THE SOIL REPORT RECOMMENDATIONS, EITHER INCREASE OR DECREASE, SHALL BE SUBMITTED TO THE OWNER WITH THE REPORT.
4. FOR BIDDING PURPOSES ONLY, THE SOIL PREPARATION SHALL CONSIST OF THE FOLLOWING:
   a. TURF: INCORPORATE THE FOLLOWING AMENDMENTS INTO THE TOP 8" OF SOIL BY MEANS OF ROTOTILLING AFTER CROSS-RIPPING:
   i. NITROGEN STABILIZED ORGANIC AMENDMENT - 4 CU. YDS. PER 1,000 S.F.
   ii. AMMONIUM PHOSPHATE 16-20-0 - 15 LBS PER 1,000 S.F.
   iii. AGRICULTURAL GYPSUM - 100 LBS PER 1,000 S.F.
   b. TREES, SHRUBS, AND PERENNIALS: INCORPORATE THE FOLLOWING AMENDMENTS INTO THE TOP 8" OF SOIL BY MEANS OF ROTOTILLING AFTER CROSS-RIPPING:
   i. NITROGEN STABILIZED ORGANIC AMENDMENT - 4 CU. YDS. PER 1,000 S.F.
   ii. 12-12-12 FERTILIZER - 10 LBS. PER CU. YD.
   iii. AGRICULTURAL GYPSUM - 10 LBS. PER CU. YD.
   iv. IRON SULPHATE - 2 LBS. PER CU. YD.
5. CONTRACTOR SHALL ENSURE THAT THE GRADE IN SOD AREAS SHALL BE 1" BELOW FINISH GRADE BEFORE INSTALLING SOIL AMENDMENTS, AND 2" BELOW FINISH GRADE IN SHRUB AREAS BEFORE INSTALLING SOIL AMENDMENTS. MULCH COVER WITHIN 6" OF CONCRETE WALKS AND CURBS SHALL NOT PROTRUDE ABOVE THE FINISH SURFACE OF THE WALKS AND CURBS. MULCH COVER WITHIN 12" OF WALLS SHALL BE AT LEAST 3" LOWER THAN THE TOP OF WALL.
6. ONCE SOIL PREPARATION IS COMPLETE, THE LANDSCAPE CONTRACTOR SHALL ENSURE THAT THERE ARE NO DEBRIS, TRASH, OR STONES LARGER THAN 1" REMAINING IN THE TOP 6" OF SOIL.

B. GENERAL PLANTING
1. REMOVE ALL NURSERY TAGS AND STAKES FROM PLANTS.
2. EXCEPT IN AREAS TO BE PLANTED WITH ORNAMENTAL GRASSES, APPLY PRE-EMERGENT HERBICIDES AT THE MANUFACTURER'S RECOMMENDED RATE.
3. TRENCHING NEAR EXISTING TREES:
   a. CONTRACTOR SHALL NOT DISTURB ROOTS 1-1/2" AND LARGER IN DIAMETER WITHIN THE CRITICAL ROOT ZONE (CRZ) OF EXISTING TREES, AND SHALL EXERCISE ALL POSSIBLE CARE AND PRECAUTIONS TO AVOID INJURY TO TREE ROOTS, TRUNKS, AND BRANCHES. THE CRZ IS DEFINED AS A CIRCULAR AREA EXTENDING OUTWARD FROM THE TREE TRUNK, WITH A RADIUS EQUAL TO 1' FOR EVERY 1" OF TRUNK DIAMETER-AT-BREAST-HEIGHT (4.5' ABOVE THE AVERAGE GRADE AT THE TRUNK).
   b. ALL EXCAVATION WITHIN THE CRZ SHALL BE PERFORMED USING HAND TOOLS. NO MACHINE EXCAVATION OR TRENCHING OF ANY KIND SHALL BE ALLOWED WITHIN THE CRZ.
   c. ALTER ALIGNMENT OF PIPE TO AVOID TREE ROOTS 1-1/2" AND LARGER IN DIAMETER. WHERE TREE ROOTS 1-1/2" AND LARGER IN DIAMETER ARE ENCOUNTERED IN THE FIELD, TUNNEL UNDER SUCH ROOTS. WRAP EXPOSED ROOTS WITH SEVERAL LAYERS OF BURLAP AND KEEP MOIST. CLOSE ALL TRENCHES WITHIN THE CANOPY DRIP LINES WITHIN 24 HOURS.
   d. ALL SEVERED ROOTS SHALL BE HAND PRUNED WITH SHARP TOOLS AND ALLOWED TO AIR-DRY. DO NOT USE ANY SORT OF SEALERS OR WOUND PAINTS.

C. TREE PLANTING
1. TREE PLANTING HOLES SHALL BE EXCAVATED TO MINIMUM WIDTH OF TWO TIMES THE WIDTH OF THE ROOTBALL, AND TO A DEPTH EQUAL TO THE DEPTH OF THE ROOTBALL LESS TWO TO FOUR INCHES.
2. SCARIFY THE SIDES AND BOTTOM OF THE PLANTING HOLE PRIOR TO THE PLACEMENT OF THE TREE. REMOVE ANY GLAZING THAT MAY HAVE BEEN CAUSED DURING THE EXCAVATION OF THE HOLE.
3. FOR CONTAINER AND BOX TREES, TO REMOVE ANY POTENTIALLY GIRDLING ROOTS AND OTHER ROOT DEFECTS, THE CONTRACTOR SHALL SHAVE A 1" LAYER OFF OF THE SIDES AND BOTTOM OF THE ROOTBALL OF ALL TREES JUST BEFORE PLACING INTO THE PLANTING PIT. DO NOT "TEASE" ROOTS OUT FROM THE ROOTBALL.
4. INSTALL THE TREE ON UNDISTURBED SUBGRADE SO THAT THE TOP OF THE ROOTBALL IS TWO TO FOUR INCHES ABOVE THE SURROUNDING GRADE.
5. BACKFILL THE TREE HOLE UTILIZING THE EXISTING TOPSOIL FROM ON-SITE. ROCKS LARGER THAN 1" DIA. AND ALL OTHER DEBRIS SHALL BE REMOVED FROM THE SOIL PRIOR TO THE BACKFILL. SHOULD ADDITIONAL SOIL BE REQUIRED TO ACCOMPLISH THIS TASK, USE STORED TOPSOIL FROM ON-SITE OR IMPORT ADDITIONAL TOPSOIL FROM OFF-SITE AT NO ADDITIONAL COST TO THE OWNER. IMPORTED TOPSOIL SHALL BE OF SIMILAR TEXTURAL CLASS AND COMPOSITION IN THE ON-SITE SOIL.
6. THE TOTAL NUMBER OF TREE STAKES (BEYOND THE MINIMUMS LISTED BELOW) WILL BE LEFT TO THE LANDSCAPE CONTRACTOR'S DISCRETION. SHOULD ANY TREES FALL OR LEAN, THE LANDSCAPE CONTRACTOR SHALL STRAIGHTEN THE TREE, OR REPLACE IT SHOULD IT BECOME DAMAGED. TREE STAKING SHALL ADHERE TO THE FOLLOWING GUIDELINES:
   a. 1"-2" TREES — TWO STAKES PER TREE
   b. 2-1/2"-4" TREES — THREE STAKES PER TREE
   c. TREES OVER 4" CALIPER — GUY AS NEEDED
   d. MULTI-TRUNK TREES — THREE STAKES PER TREE MINIMUM, QUANTITY AND POSITIONS AS NEEDED TO STABILIZE THE TREE
7. UPON COMPLETION OF PLANTING, CONSTRUCT AN EARTH WATERING BASIN AROUND THE TREE. COVER THE INTERIOR OF THE TREE RING WITH WITH MULCH (TYPE AND DEPTH PER PLANS).

D. SHRUB, PERENNIAL, AND GROUNDCOVER PLANTING
1. DIG THE PLANTING HOLES TWICE AS WIDE AND 2" LESS DEEP THAN EACH PLANT'S ROOTBALL. INSTALL THE PLANT IN THE HOLE. BACKFILL AROUND THE PLANT WITH SOIL AMENDED PER SOIL TEST RECOMMENDATIONS.
2. INSTALL THE WEED BARRIER CLOTH, OVERLAPPING IT AT THE ENDS. UTILIZE STEEL STAPLES TO KEEP THE WEED BARRIER CLOTH IN PLACE.
3. WHEN PLANTING IS COMPLETE, INSTALL MULCH (TYPE AND DEPTH PER PLANS) OVER ALL PLANTING BEDS, COVERING THE ENTIRE PLANTING AREA.

F. SODDING
1. SOD VARIETY TO BE AS SPECIFIED ON THE LANDSCAPE PLAN.
2. LAY SOD WITHIN 24 HOURS FROM THE TIME OF STRIPPING. DO NOT LAY IF THE GROUND IS FROZEN.
3. LAY THE SOD TO FORM A SOLID MASS WITH TIGHTLY FITTED JOINTS. BUTT ENDS AND SIDES OF SOD STRIPS - DO NOT OVERLAP. STAGGER STRIPS TO OFFSET JOINTS IN ADJACENT COURSES.
4. ROLL THE SOD TO ENSURE GOOD CONTACT OF THE SOD'S ROOT SYSTEM WITH THE SOIL UNDERNEATH.
5. WATER THE SOD THOROUGHLY WITH A FINE SPRAY IMMEDIATELY AFTER PLANTING TO OBTAIN AT LEAST SIX INCHES OF PENETRATION INTO THE SOIL BELOW THE SOD.

G. HYDROMULCHING
1. TURF HYDROMULCH MIX (PER 1,000 SF) SHALL BE AS FOLLOWS:
   a. WINTER MIX (OCTOBER 1 - MARCH 31)
      50# CELLULOSE FIBER MULCH
      2# UNHULLED BERMUDA SEED
      2# ANNUAL RYE SEED
      15# 15-15-15 WATER SOLUBLE FERTILIZER
   b. SUMMER MIX (APRIL 1 - SEPTEMBER 30)
      50# CELLULOSE FIBER MULCH
      2# HULLED BERMUDA SEED
      15# 15-15-15 WATER SOLUBLE FERTILIZER
2. SEED HYDROMULCH MIX (PER 1,000 SF) SHALL BE AS FOLLOWS:
   a. GENERAL
      50# CELLULOSE FIBER MULCH
      15# 15-15-15 WATER SOLUBLE FERTILIZER
      SEED RATE PER LEGEND

H. CLEAN UP
1. DURING LANDSCAPE PREPARATION AND PLANTING, KEEP ALL PAVEMENT CLEAN AND ALL WORK AREAS IN A NEAT, ORDERLY CONDITION.
2. DISPOSED LEGALLY OF ALL EXCAVATED MATERIALS OFF THE PROJECT SITE.

I. INSPECTION AND ACCEPTANCE
1. UPON COMPLETION OF THE WORK, THE LANDSCAPE CONTRACTOR SHALL PROVIDE THE SITE CLEAN, FREE OF DEBRIS AND TRASH, AND SUITABLE FOR USE AS INTENDED. THE LANDSCAPE CONTRACTOR SHALL THEN REQUEST AN INSPECTION BY THE OWNER TO DETERMINE FINAL ACCEPTABILITY.
2. WHEN THE INSPECTED PLANTING WORK DOES NOT COMPLY WITH THE CONTRACT DOCUMENTS, THE LANDSCAPE CONTRACTOR SHALL REPLACE AND/OR REPAIR THE REJECTED WORK TO THE OWNER'S SATISFACTION WITHIN 24 HOURS.
3. THE LANDSCAPE MAINTENANCE PERIOD WILL NOT COMMENCE UNTIL THE LANDSCAPE WORK HAS BEEN RE-INSPECTED BY THE OWNER AND FOUND TO BE ACCEPTABLE. AT THAT TIME, A WRITTEN NOTICE OF FINAL ACCEPTANCE WILL BE ISSUED BY THE OWNER, AND THE MAINTENANCE AND GUARANTEE PERIODS WILL COMMENCE.

J. LANDSCAPE MAINTENANCE
1. THE LANDSCAPE CONTRACTOR SHALL BE RESPONSIBLE FOR THE MAINTENANCE OF ALL WORK SHOWN ON THESE PLANS FOR 90 DAYS BEYOND FINAL ACCEPTANCE OF ALL LANDSCAPE WORK BY THE OWNER. LANDSCAPE MAINTENANCE SHALL INCLUDE WEEKLY SITE VISITS FOR THE FOLLOWING ACTIONS (AS APPROPRIATE): PROPER PRUNING, RESTAKING OF TREES, RESETTING OF PLANTS THAT HAVE SETTLED, MOWING AND AERATION OF LAWNS, WEEDING, RESEEDING AREAS WHICH HAVE NOT GERMINATED WELL, TREATING FOR INSECTS AND DISEASES,REPLACEMENT OF MULCH, REMOVAL OF LITTER, REPAIRS TO THE IRRIGATION SYSTEM DUE TO FAULTY PARTS AND/OR WORKMANSHIP, AND THE APPROPRIATE WATERING OF ALL PLANTINGS. THE LANDSCAPE CONTRACTOR SHALL MAINTAIN THE IRRIGATION SYSTEM IN PROPER WORKING ORDER, WITH SCHEDULING ADJUSTMENTS BY SEASON TO MAXIMIZE WATER CONSERVATION.
2. SHOULD SEEDED AND/OR SODDED AREAS NOT BE COVERED BY AN AUTOMATIC IRRIGATION SYSTEM, THE LANDSCAPE CONTRACTOR SHAL BE RESPONSIBLE FOR WATERING THESE AREAS AND OBTAINING A FULL, HEALTHY STAND OF GRASS AT NO ADDITIONAL COST TO THE OWNER.
3. TO ACHIEVE FINAL ACCEPTANCE AT THE END OF THE MAINTENANCE PERIOD, ALL OF THE FOLLOWING CONDITIONS MUST OCCUR:
   a. THE LANDSCAPE SHALL SHOW ACTIVE, HEALTHY GROWTH (WITH EXCEPTIONS MADE FOR SEASONAL DORMANCY). ALL PLANTS NOT MEETING THIS CONDITION SHALL BE REJECTED AND REPLACED BY HEALTHY PLANT MATERIAL PRIOR TO FINAL ACCEPTANCE.
   b. ALL HARDSCAPE SHALL BE CLEANED PRIOR TO FINAL ACCEPTANCE.
   c. SODDED AREAS MUST BE ACTIVELY GROWING AND MUST REACH A MINIMUM HEIGHT OF 1 1/2 INCHES BEFORE FIRST MOWING. HYDROMULCHED AREAS SHALL SHOW ACTIVE, HEALTHY GROWTH. BARE AREAS LARGER THAN TWELVE SQUARE INCHES MUST BE RESODDED OR RESEEDED (AS APPROPRIATE) PRIOR TO FINAL ACCEPTANCE. ALL SODDED TURF SHALL BE NEATLY MOWED.

K. WARRANTY PERIOD, PLANT GUARANTEE AND REPLACEMENTS
1. THE LANDSCAPE CONTRACTOR SHALL GUARANTEE ALL TREES, SHRUBS, PERENNIALS, SOD, SEEDED/HYDROMULCHED AREAS, AND IRRIGATION SYSTEMS FOR A PERIOD OF ONE YEAR FROM THE DATE OF THE OWNER'S FINAL ACCEPTANCE (90 DAYS FOR ANNUAL PLANTS). THE CONTRACTOR SHALL REPLACE, AT HIS OWN EXPENSE AND TO THE SATISFACTION OF THE OWNER, ANY PLANTS WHICH DIE IN THAT TIME, OR REPAIR ANY PORTIONS OF THE IRRIGATION SYSTEM WHICH OPERATE IMPROPERLY.
2. AFTER THE INITIAL MAINTENANCE PERIOD AND DURING THE GUARANTEE PERIOD, THE LANDSCAPE CONTRACTOR SHALL ONLY BE RESPONSIBLE FOR REPLACEMENT OF PLANTS WHEN PLANT DEATH CANNOT BE ATTRIBUTED DIRECTLY TO OVERWATERING OR OTHER DAMAGE BY HUMAN ACTIONS.

L. PROVIDE A MINIMUM OF (2) COPIES OF RECORD DRAWINGS TO THE OWNER UPON COMPLETION OF WORK. A RECORD DRAWING IS A RECORD OF ALL CHANGES THAT OCCURRED IN THE FIELD AND THAT ARE DOCUMENTED THROUGH CHANGE ORDERS, ADDENDA, OR CONTRACTOR/CONSULTANT DRAWING MARKUPS.

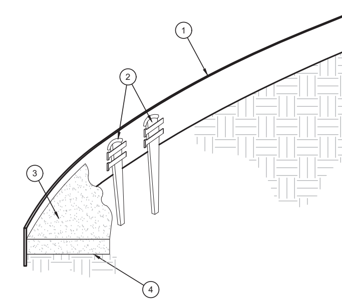

1. ROLLED-TOP STEEL EDGING PER PLANS.
2. TAPERED STEEL STAKES.
3. MULCH, TYPE AND DEPTH PER PLANS.
4. FINISH GRADE.

NOTES:
1) INSTALL EDGING SO THAT STAKES WILL BE ON INSIDE OF PLANTING BED.
2) BOTTOM OF EDGING SHALL BE BURIED A MINIMUM OF 1" BELOW FINISH GRADE.
3) TOP OF MULCH SHALL BE 1" LOWER THAN TOP OF EDGING.

C STEEL EDGING
SCALE: NOT TO SCALE

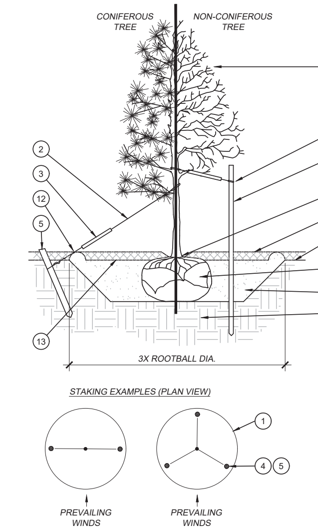

1. TREE CANOPY.
2. CINCH-TIES (24" BOX/2" CAL. TREES AND SMALLER) OR 12 GAUGE GALVANIZED WIRE WITH NYLON TREE STRAPS AT TREE AND STAKE (36" BOX/2.5" CAL. TREES AND LARGER). SECURE TIES OR STRAPS TO TRUNK JUST ABOVE LOWEST MAJOR BRANCHES.
3. 24" X 3/4" P.V.C. MARKERS OVER WIRES.
4. GREEN STEEL T-POSTS. EXTEND POSTS 12" MIN. INTO UNDISTURBED SOIL.
5. PRESSURE-TREATED WOOD DEADMAN, TWO PER TREE (MIN.). BURY OUTSIDE OF PLANTING PIT AND 18" MIN. INTO UNDISTURBED SOIL.
6. TRUNK FLARE.
7. MULCH, TYPE AND DEPTH PER PLANS. DO NOT PLACE MULCH WITHIN 6" OF TRUNK.
8. FINISH GRADE.
9. ROOT BALL.
10. BACKFILL. AMEND AND FERTILIZE ONLY AS RECOMMENDED IN SOIL FERTILITY ANALYSIS.
11. UNDISTURBED NATIVE SOIL.
12. 4" HIGH EARTHEN WATERING BASIN.
13. FINISH GRADE.

NOTES:
1. SCARIFY SIDES OF PLANTING PIT PRIOR TO SETTING TREE.
2. REMOVE EXCESS SOIL APPLIED ON TOP OF THE ROOTBALL THAT COVERS THE ROOT FLARE. THE PLANTING HOLE DEPTH SHALL BE SUCH THAT THE ROOTBALL RESTS ON UNDISTURBED SOIL, AND THE ROOT FLARE IS 2"-4" ABOVE FINISH GRADE.
3. FOR B&B TREES, CUT OFF BOTTOM 1/3 OF WIRE BASKET BEFORE PLACING TREE IN HOLE, CUT OFF AND REMOVE REMAINDER OF BASKET AFTER TREE IS SET IN HOLE, REMOVE ALL NYLON TIES, TWINE, ROPE, AND OTHER PACKING MATERIAL. REMOVE AS MUCH BURLAP FROM AROUND ROOTBALL AS IS PRACTICAL.
4. REMOVE ALL NURSERY STAKES AFTER PLANTING.
5. FOR TREES 36" BOX/2.5" CAL. AND LARGER, USE THREE STAKES OR DEADMEN (AS APPROPRIATE), SPACED EVENLY AROUND TREE.
6. STAKING SHALL BE TIGHT ENOUGH TO PREVENT TRUNK FROM BENDING, BUT LOOSE ENOUGH TO ALLOW SOME TRUNK MOVEMENT IN WIND.

A TREE PLANTING
SCALE: NOT TO SCALE

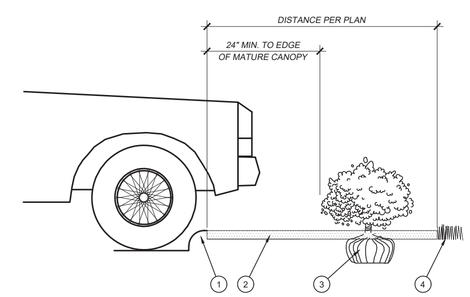

1. CURB.
2. MULCH LAYER.
3. PLANT.
4. TURF (WHERE SHOWN ON PLAN).

D PLANTING AT PARKING AREA
SCALE: NOT TO SCALE

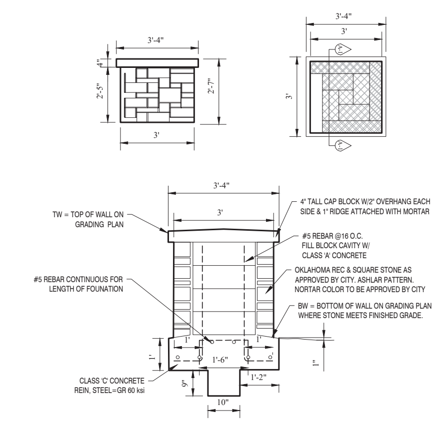

SECTION A-1: DETAIL
NOT TO SCALE

B TxDOT COLUMN LANDSCAPE AMENITY
SCALE: NTS

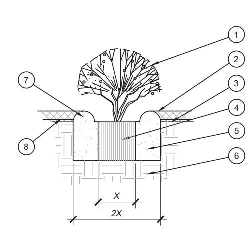

1. SHRUB, PERENNIAL, OR ORNAMENTAL GRASS.
2. MULCH, TYPE AND DEPTH PER PLANS. PLACE NO MORE THAN 1" OF MULCH WITHIN 6" OF PLANT CENTER.
3. FINISH GRADE.
4. ROOT BALL.
5. BACKFILL. AMEND AND FERTILIZE ONLY AS RECOMMENDED IN SOIL FERTILITY ANALYSIS.
6. UNDISTURBED NATIVE SOIL.
7. 3" HIGH EARTHEN WATERING BASIN.
8. WEED FABRIC UNDER MULCH.

E SHRUB AND PERENNIAL PLANTING
SCALE: NTS

REGISTERED LANDSCAPE ARCHITECT — JAMES W GIBSON — 2898 — STATE OF TEXAS
DATE: 6/14/18

EVERGREEN DESIGN GROUP
(800) 680-6630
15305 Dallas Pkwy., Ste 300
Addison, TX 75001
www.landscape-consultants.net

Case SUP 2018-02

DYNAMIC ENGINEERING
(dba) MIDWEST DYNAMIC ENGINEERING CONSULTANTS, PC
LAND DEVELOPMENT CONSULTING • PERMITTING • GEOTECHNICAL • ENVIRONMENTAL • SURVEY • PLANNING & ZONING
Additional offices conveniently located at:
14521 Old Katy Road, Suite 250, Houston, TX 77079 T: 281.789.6400 | 901 Mopac Expressway South, Barton Oaks Plaza One, Suite 300, Austin, TX 78746 T:512.646.2646
1904 Main Street, Lake Como, NJ 07719 T: 732.974.0198 F: 732.974.3521 | 245 Main Street, Suite 110, Chester, NJ 07930 T: 908.879.9229 F: 908.879.0222
790 Newtown Yardley Road, Suite 425, PA 18940 T: 267.685.0276 F: 267.685.0361 | 8 Robbins Street, Suite 102, Toms River, NJ 08753 T: 732.974.0198 F: 732.974.3521

Texas Registered Engineering Firm No. F-13660
1301 Central Expressway South - Suite 210
Allen, TX 75013
T: 972.534.2100
www.dynamicec.com

TITLE: LANDSCAPE DETAILS AND SPECS

PROJECT: VPS
HYUNDAI N. RICHLAND HILLS
LOT A3, AR1A
7724 NE LOOP 820
CITY OF NORTH RICHLAND HILLS

JOB No:	XXXX-XX-XXX
DATE:	6/14/18
DRAWN BY:	JWG
DESIGNED BY:	JWG
CHECKED BY:	RM
SCALE:	(H) AS (V) SHOWN
SHEET No:	3 (1 OF 3)
DEC Client Code:	XXXX
Rev. #	0

CONSTRUCTION CHECK — DATE
CONSTRUCTION CHECK — DATE

Rev. | Date | Comments | By

Plotted: 06/14/18 – 10:21 AM, By: Shaka Jazzbeaux, – Product Ver: 21.0s (LMS Tech)
File: C:\Users\Shaka Jazzbeaux\Dropbox (Rodney)\EDG – Shared\2018\North Richland Hills TX\Hyundai\Site Plan – 2018–05–03 Landscape.dwg, ---> LP-2

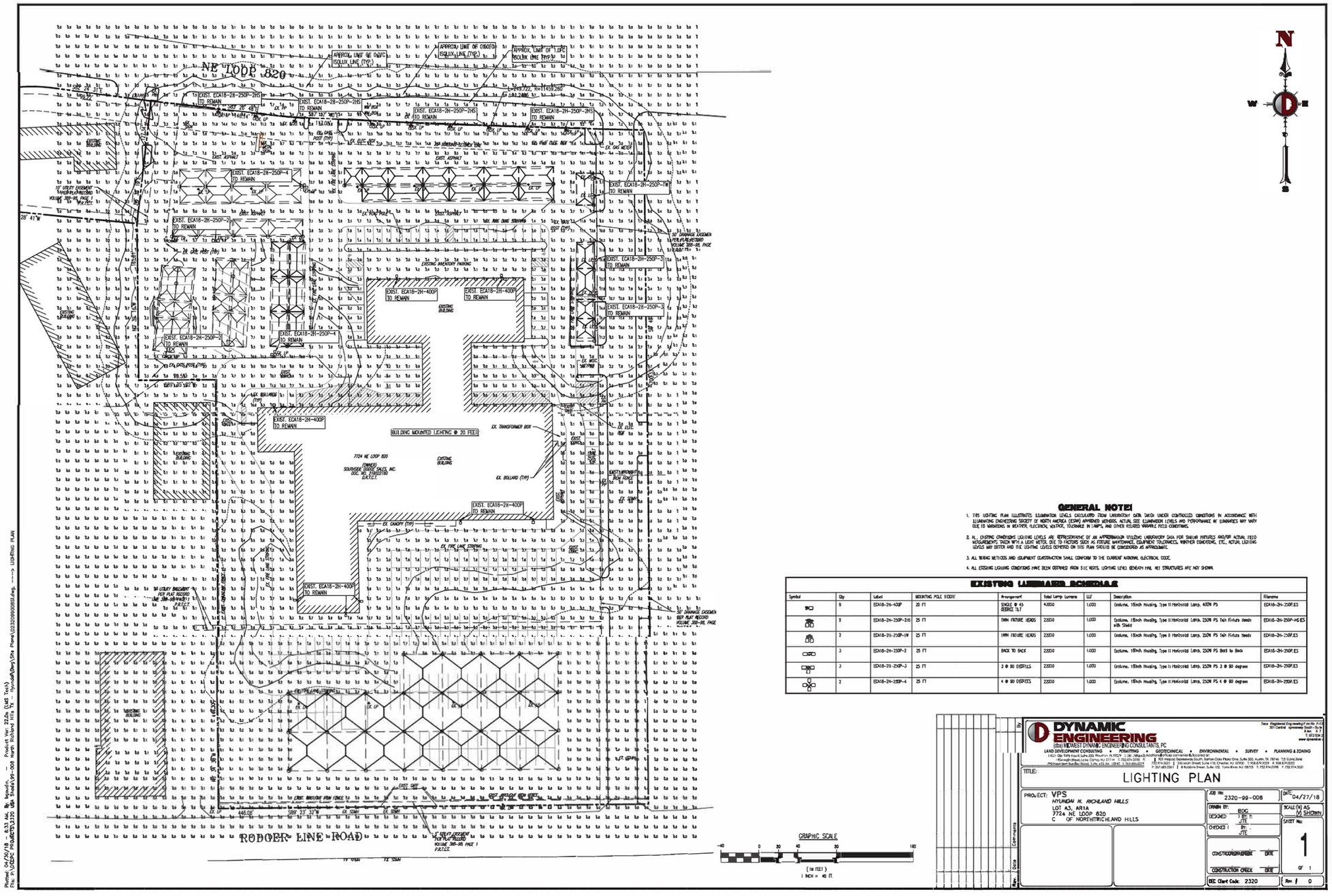

GENERAL NOTES

1. THIS LIGHTING PLAN ILLUSTRATES ILLUMINATION LEVELS CALCULATED FROM LABORATORY DATA TAKEN UNDER CONTROLLED CONDITIONS IN ACCORDANCE WITH ILLUMINATING ENGINEERING SOCIETY OF NORTH AMERICA (IESNA) APPROVED METHODS. ACTUAL SITE ILLUMINATION LEVELS AND PERFORMANCE OF LUMINAIRES MAY VARY DUE TO VARIATIONS IN WEATHER, ELECTRICAL VOLTAGE, TOLERANCE IN LAMPS, AND OTHER RELATED VARIABLE FIELD CONDITIONS.
2. ALL EXISTING CONDITIONS LIGHTING LEVELS ARE REPRESENTATIVE OF AN APPROXIMATION UTILIZING LABORATORY DATA FOR SIMILAR FIXTURES AND/OR ACTUAL FIELD MEASUREMENTS TAKEN WITH A LIGHT METER. DUE TO FACTORS SUCH AS FIXTURE MAINTENANCE, EQUIPMENT TOLERANCES, WEATHER CONDITIONS, ETC., ACTUAL LIGHTING LEVELS MAY DIFFER AND THE LIGHTING LEVELS DEPICTED ON THIS PLAN SHOULD BE CONSIDERED AS APPROXIMATE.
3. ALL WIRING METHODS AND EQUIPMENT CONSTRUCTION SHALL CONFORM TO THE CURRENT NATIONAL ELECTRICAL CODE.
4. ALL EXISTING LIGHTING CONDITIONS HAVE BEEN OBTAINED FROM SITE VISITS. LIGHTING LEVELS BENEATH HAL VEI STRUCTURES ARE NOT SHOWN.

EXISTING LUMINAIRE SCHEDULE

Symbol	Qty	Label	MOUNTING POLE HEIGHT	Arrangement	Total Lamp Lumens	LLF	Description	Filename
	5	ECA18-2H-400P	20 FT	SINGLE @ 45 DEGREE TILT	40000	1.000	Cooluma, 15inch Housing, Type II Horizontal Lamp, 400W PS	ECA18-2H-250P.IES
	9	ECA18-2H-250P-2HS	25 FT	TWIN FIXTURE HEADS	22000	1.000	Cooluma, 15inch Housing, Type II Horizontal Lamp, 250W PS Twin Fixture Heads with Shield	ECA18-2H-250P-HS.IES
	2	ECA18-2H-250P-1W	25 FT	TWIN FIXTURE HEADS	22000	1.000	Cooluma, 15inch Housing, Type II Horizontal Lamp, 250W PS Twin Fixture Heads	ECA18-2H-250P.IES
	3	ECA18-2H-250P-2	25 FT	BACK TO BACK	22000	1.000	Cooluma, 15inch Housing, Type II Horizontal Lamp, 250W PS Back to Back	ECA18-2H-250P.IES
	3	ECA18-2H-250P-3	25 FT	3 @ 90 DEGREES	22000	1.000	Cooluma, 15inch Housing, Type II Horizontal Lamp, 250W PS 3 @ 90 degrees	ECA18-2H-250P.IES
	2	ECA18-2H-250P-4	25 FT	4 @ 90 DEGREES	22000	1.000	Cooluma, 15inch Housing, Type II Horizontal Lamp, 250W PS 4 @ 90 degrees	ECA18-2H-250P.IES

GRAPHIC SCALE

-40 0 20 40 80 160

(IN FEET)
1 INCH = 40 FT.

Rev.	Date	Comments	By

DYNAMIC ENGINEERING
(dba) MIDWEST DYNAMIC ENGINEERING CONSULTANTS, PC
LAND DEVELOPMENT CONSULTING • PERMITTING • GEOTECHNICAL • ENVIRONMENTAL • SURVEY • PLANNING & ZONING
Texas Registered Engineering Firm No. F-439
301 Central Expressway South - Suite A
Allen, TX 75013
T: 972.534.2
www.dynamicinc.

TITLE: LIGHTING PLAN

PROJECT: VPS
HYUNDAI N. RICHLAND HILLS
LOT A3, ARIA
7724 NE LOOP 820
C OF NORTH RICHLAND HILLS

JOB No: 2320-99-008	DATE: 04/27/18
DRAWN BY: BDG	SCALE(S): AS M SHOWN
DESIGNED BY: JTE	SHEET No: 1
CHECKED BY: JTE	OF 1
CONSTRUCTION MANAGER / DATE	
CONSTRUCTION CHECK / DATE	
DEC Client Code: 2320	Rev. # 0

Plotted: 04/20/18 - 8:33 AM, By: bgaudin, — Project Ver: 22.0a (LMS Tech)
File: P:\DEPC PROJECTS\2320 VPS Shell\99-008 North Richland Hills, TX - Hyundai\Dwg\SPk Plans\2320299008SE.dwg, ----> LIGHTING PLAN

GENERAL NOTES

DESIGN LOADS

BUILDING CODE	IBC 2012
LIVE LOADS	5 PSF
SNOW LOAD	5 PSF
WIND LOADS	115 MPH 3-Sec. Gust, RISK CATEGORY II & EXPOSURE C

1.- 115 MPH ACCORDING THE ULTIMATE WIND SPEED MAPS OF ASCE 7-10 IS EQUIVALENT TO THE NOMINAL WIND SPEED OF 90 MPH ACCORDING ASCE 7-05 AND IBC 2012 EQ 16-32.

STRUCTURAL STEEL

1.- ALL STRUCTURAL SHAPES SHALL BE COLD FORMED HSS ASTM A500 GRADE C, UNLESS OTHERWISE NOTED, TYPICAL MECHANICAL PROPERTIES FOR HSS PRODUCTS:

SQUARE AND RECTANGULAR	50,000 PSI YIELD / 62,000 PSI TENSILE
ROUND PIPE	46,000 PSI YIELD / 62,000 PSI TENSILE

2.- ALL GALVANIZED STEEL TUBE PRODUCTS ARE MANUFACTURED PER ASTM A500, TYPICAL MECHANICAL PROPERTIES ACHIEVED FOR GALVANIZED TUBE PRODUCTS:
ROUND TUBE 45,000 PSI YIELD / 48,000 PSI TENSILE

3.- ALL PLATES SHALL COMPLY WITH ASTM A572 GRADE 50.

4.- ALL STEEL TUBING SHALL BE TRIPLE COATED FOR RUST PROTECTION USING THE IN-LINE ELECTROPLATING COAT PROCESS. TUBING SHALL BE INTERNALLY COATED WITH ZINC AND ORGANIC COATINGS TO PREVENT CORROSION AS MANUFACTURED BY ALLIED TUBE & CONDUIT.

5.- STRUCTURAL STEEL SHALL BE DETAILED, FABRICATED AND ERECTED IN ACCORDANCE WITH A.I.S.C. SPECIFICATIONS.

6.- ALL SHOP WELDS SHALL BE EXECUTED IN ACCORDANCE WITH THE LATEST EDITION OF THE AMERICAN WELDING SOCIETY (AWS) D1.1 SPECIFICATIONS. ALL WELDS SHALL BE CONTINUOUS WHERE LENGTH IS NOT GIVEN, UNLESS OTHERWISE SHOWN OR NOTED ON DRAWINGS. ALL WELDS SHALL DEVELOP THE FULL STRENGTH OF THE WEAKER MEMBER. ALL WELDS SHALL BE MADE USING E70XX .045 WIRE.

7.- SHOP CONNECTIONS SHALL BE WELDED UNLESS NOTED OTHERWISE. FIELD CONNECTIONS SHALL BE AS INDICATED ON THE DRAWINGS (IF REQUIRED). ALL FILLET WELDS SHALL BE A MINIMUM OF 3/16" UNLESS OTHERWISE NOTED. FIELD WELDS SHALL NOT BE ALLOWED.

8.- ALL HIGH STRENGTH BOLTS SHALL COMPLY WITH ASTM A325 TYPE 1 OR A490 TYPE 1. ALL NUTS SHALL COMPLY WITH ASTM A563DH. AND WASHERS SHALL COMPLY WITH ASTM F436.

9.- ALL HIGH STRENGTH BOLTS SHALL BE TIGHTENED TO A SNUG TIGHT CONDITION.

10.- ALL STAINLESS STEEL BOLTS / STUDS SHALL COMPLY WITH ASTM F-593. ALLOY GROUP 1 OR 2 ALL NUTS SHALL COMPLY WITH ASTM F-594 ALLOY GROUP 1 OR 2.

11.- ALL STRUCTURAL STEEL SHALL BE PAINTED WITH ONE SHOP COAT (2.5 TO 3.5 MILS THICK MIN). THIS COAT IS A WEATHER RESISTANT POWDER COATING BASED ON POLYESTER TGIC (MANUFACTURED BY SHERWIN WILLIAMS OR TIGER DRYLAC). TO ACHIEVE OPTIMUM ADHESION, IT IS RECOMMENDED THAT THE PROPER TREATMENT AND DRYING TAKE PLACE BEFORE COATING. POLYESTER POWDER (TGIC) SPECIFICATIONS SHALL BE AS FOLLOWS:
- PENCIL HARDNESS (ASTM D-3363)
- HUMIDITY (ASTM D-2247)
- SOLVENT RESISTANCE (PCI METHOD) - 50 DBL RUBS SL. SOFTNES

FABRIC SPECIFICATION

1.- FABRIC SHALL BE A HIGH DENSITY POLYETHYLENE WITH ULTRA VIOLET ADDITIVES, WITH MONOFILAMENT AND TAPE CONSTRUCTION GIVING A STABLE MATERIAL AND RACHEL KNITTED TO ENSURE MATERIAL WILL NOT UNRAVEL IF CUT.

2.- FABRIC SPECIFICATIONS:

	SOLID COLORS	STRIPE COLORS
- FADING	MINIMUM FADING AFTER 5 YEARS	
- LIFE EXPECTANCY EXPOSURE TO THE SUN	A MINIMUM OF 8 YEARS CONTINUOUS	

3.- FIRE TEST ON FABRIC: NFPA 701 TEST 2 AND ASTM E 64

4.- THREAD-PTFE (TEFLON) USED MEET THE FOLLOWING SPECIFICATIONS: HIGH STRENGTH, LOW SHRINKAGE, WIDE TEMPERATURE RANGE. FLEX & ABRASION RESISTANT AND UV RADIATION IMMUNITY. LOCKSTITCH - 1200 DENIER. CHAINSTITCH THREAD - 2400 DENIER.

AIRCRAFT CABLE

1.- WIRE ROPE CABLE SHALL BE 7x19 STRAND CORE GALVANIZED WIRE ROPE WITH A BREAKING STRENGTH VALUE OF 14,400 LBS (3/8" DIAMETER).

2.- CABLES SHALL BE FED THROUGH THE FABRIC SLEEVES AROUND THE PERIMETER OF THE CANOPY AND TENSIONED UNTIL THE FABRIC PANELS (DESIGNED PURPOSELY UNDERSIZED) REACH A TAUNT APPEARANCE. ANY LONG TERM CABLE SAG SHALL BE MINIMIZED DURING THE MAINTENANCE RE-TIGHTENING VISITS AS REQUIRED.

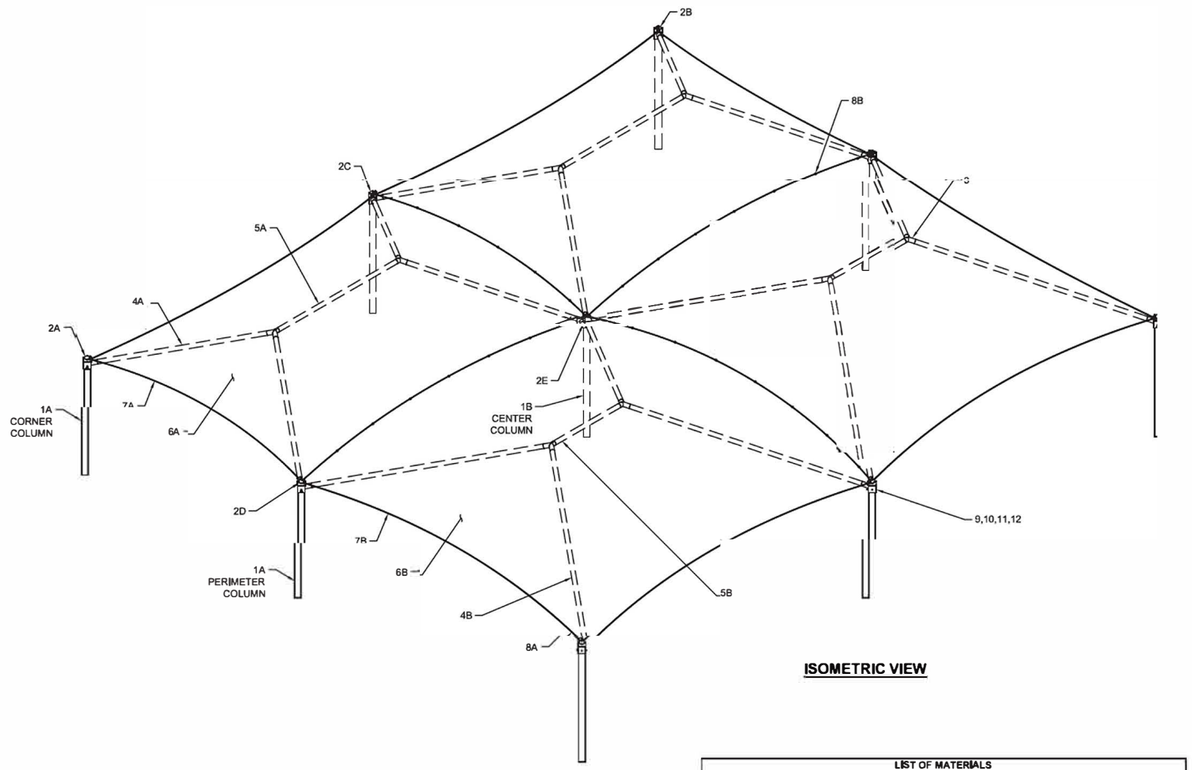

ISOMETRIC VIEW

CODE ANALYSIS				
BUILDING	OCCUPANCY	CONSTRUCTION TYPE	AREA (SQF)	OCCUPANT LOAD
SHADE STRUCTURE	U	V-B	TBD	N/A
DIAMOND PROTECTORS				

LIST OF MATERIALS

ITEM	QTY.	DESCRIPTION	MATERIAL / DWG	SMI PART NO.
1A	TBD	COLUMN CORNER & PERIMETER	HSS 7 x 7 x 0.375	N/A
1B	TBD	COLUMN CENTER	HSS 7 x 7 x 0.250	N/A
2A	TBD	CROWN SINGLE RIGHT	HSS 8 x 8 x 0.375	N/A
2B	TBD	CROWN SINGLE LEFT	HSS 8 x 8 x 0.375	N/A
2C	TBD	CROWN DOUBLE LONG SIDE	HSS 8 x 8 x 0.375	N/A
2D	TBD	CROWN DOUBLE SHORT SIDE	HSS 8 x 8 x 0.375	N/A
2E	TBD	CROWN CENTER	HSS 8 x 8 x 0.375	N/A
3	TBD	CROSSPIECE	5.0 GA. 7 RD. TUBE	N/A
4A	TBD	EXTENSION	5.0 GA. 7 RD. TUBE	LENGTH VARIES
4B	TBD	EXTENSION	5.0 GA. 7 RD. TUBE	LENGTH VARIES
5A	TBD	RIDGE	5.0 GA. 7 RD. TUBE	LENGTH VARIES
5B	TBD	RIDGE	5.0 GA. 7 RD. TUBE	LENGTH VARIES
6A	TBD	FABRIC TOP (CUSTOM)	EXTREME 32	LENGTH VARIES
6B	TBD	FABRIC TOP (CUSTOM)	EXTREME 32	LENGTH VARIES
7A	TBD	3/8" STEEL CABLE	GALVANIZED CABLE	LENGTH VARIES
7B	TBD	3/8" STEEL CABLE	GALVANIZED CABLE	LENGTH VARIES
8A	TBD	Ø3/8" CABLE CLAMP	GALVANIZED	307629
8B	TBD	Ø1/2" CABLE CLAMP	GALVANIZED	307627
9	TBD	Ø3/4"-10NC x 9 1/2" HEX BOLT	ASTM A325 GALVANIZED	306328
10	TBD	Ø3/4"-10NC HEX NUT	ASTM A563 GALVANIZED	307687
11	TBD	Ø3/4" SPLIT LOCK WASHER	ASTM F436 GALVANIZED	307832
12	TBD	Ø3/4" FLAT WASHER	ASTM F436 GALVANIZED	307624

THESE PLANS AND SPECIFICATIONS ARE THE PROPERTY OF USA SHADE AND FABRIC STRUCTURES AND SHALL NOT BE REPRODUCED WITHOUT THEIR WRITTEN PERMISSION.

CORPORATE HEADQUARTERS
6505-A CHANCELLOR ROW
DALLAS, TX. 75247
800-966-5005

CERTIFICATIONS:
IAS CERTIFICATION No: FA-428
CLARK COUNTY MANUFACTURER CERTIFICATION NUMBER (NEVADA): 355

CUSTOMER:
AUTONATION INC.

PROJECT NAME:
HYUNDAI
N. RICHLAND HILLS

LOCATION:
NORTH RICHLAND HILLS
TX

PROJECT NUMBER:
1002

STRUCTURE TYPE:
DIAMOND PROTECTORS
(FULL CUSTOM)

SIZE:
VARIES

SCALE : AS NOTED

DRAWING SIZE: B

DATE	DRW	CHK	ENG
05/26/17	AK	JO	JO

NC — RELEASE FOR CONSTRUCTION — REV

Eng. By :	AK	05/26/17
Design By :	SA	05/26/17
Approved By :	SA	05/26/17

DRAWING DESCRIPTION:
NOTES / LOM

DWG. 1002-2.0

PAGE 1000

REV. NC

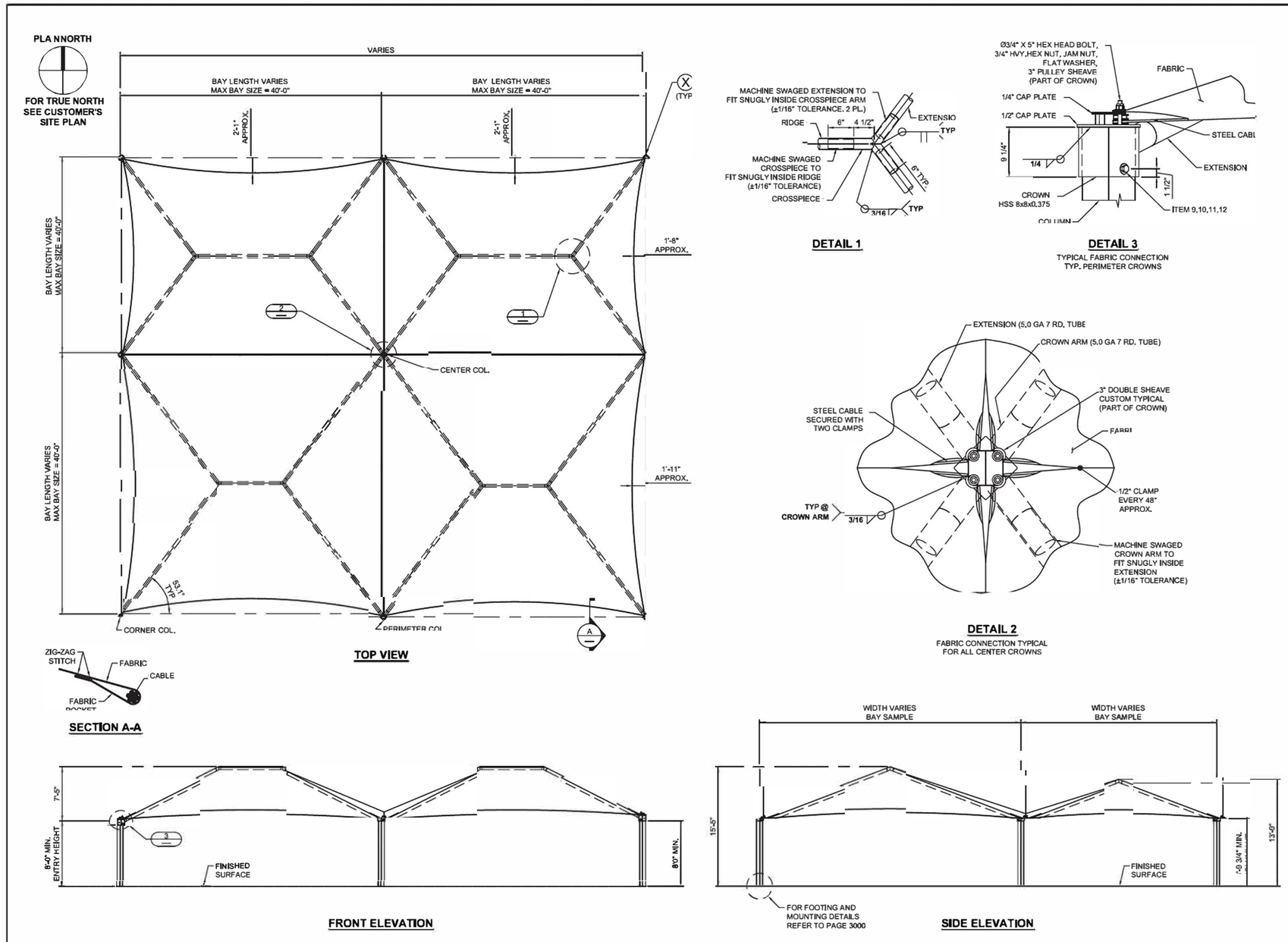

THESE PLANS AND SPECIFICATIONS ARE THE PROPERTY OF USA SHADE AND FABRIC STRUCTURES AND SHALL NOT BE REPRODUCED WITHOUT THEIR WRITTEN PERMISSION.

CORPORATE HEADQUARTERS
8505-A CHANCELLOR ROW
DALLAS, TX. 75247
800-966-5005

CERTIFICATIONS:
IAS CERTIFICATION No: FA-428
CLARK COUNTY MANUFACTURER CERTIFICATION NUMBER (NEVADA): 355

CUSTOMER: AUTONATION INC.

PROJECT NAME: HYUNDAI N. RICHLAND HILLS

LOCATION: NORTH RICHLAND HILLS TX

PROJECT NUMBER: 1002

STRUCTURE TYPE: DIAMOND PROTECTORS (FULL CUSTOM)

SIZE: VARIES

SCALE : AS NOTED

DRAWING SIZE: B

REV	NC	RELEASE FOR CONSTRUCTION	5/26/17	DATE	AK	DRW	JO	CHK	JO	ENG

Eng. By :	AK	05/26/17
Design By :	SA	05/26/17
Approved By :	SA	05/26/17

DRAWING DESCRIPTION: VIEWS AND DETAILS

DWG. 1002-2.0

PAGE 2000

REV. NC

GENERAL NOTES

DESIGN LOADS

BUILDING CODE	IBC 2012
LIVE LOADS	5 PSF
SNOW LOAD	5 PSF
WIND LOADS	115 MPH[1] 3-Sec. Gust, RISK CATEGORY II & EXPOSURE C

1.- 115 MPH ACCORDING THE ULTIMATE WIND SPEED MAPS OF ASCE 7-10 IS EQUIVALENT TO THE NOMINAL WIND SPEED OF 90 MPH ACCORDING ASCE 7-05 AND IBC 2012 EQ 16-32.

STRUCTURAL STEEL

1.- ALL STRUCTURAL SHAPES SHALL BE COLD FORMED HSS ASTM A500 GRADE C, UNLESS OTHERWISE NOTED. TYPICAL MECHANICAL PROPERTIES FOR HSS PRODUCTS:

SQUARE AND RECTANGULAR	50,000 PSI YIELD / 62,000 PSI TENSILE
ROUND PIPE	46,000 PSI YIELD / 62,000 PSI TENSILE

2.- ALL GALVANIZED STEEL TUBE PRODUCTS ARE MANUFACTURED PER ASTM A500, TYPICAL MECHANICAL PROPERTIES ACHIEVED FOR GALVANIZED TUBE PRODUCTS:
ROUND TUBE 45,000 PSI YIELD / 48,000 PSI TENSILE

3.- ALL PLATES SHALL COMPLY WITH ASTM A572 GRADE 50.

4.- ALL STEEL TUBING SHALL BE TRIPLE COATED FOR RUST PROTECTION USING THE IN-LINE ELECTROPLATING COAT PROCESS. TUBING SHALL BE INTERNALLY COATED WITH ZINC AND ORGANIC COATINGS TO PREVENT CORROSION AS MANUFACTURED BY ALLIED TUBE & CONDUIT.

5.- STRUCTURAL STEEL SHALL BE DETAILED, FABRICATED AND ERECTED IN ACCORDANCE WITH A.I.S.C. SPECIFICATIONS.

6.- ALL SHOP WELDS SHALL BE EXECUTED IN ACCORDANCE WITH THE LATEST EDITION OF THE AMERICAN WELDING SOCIETY (AWS) D1.1 SPECIFICATIONS. ALL WELDS SHALL BE CONTINUOUS WHERE LENGTH IS NOT GIVEN, UNLESS OTHERWISE SHOWN OR NOTED ON DRAWINGS. ALL WELDS SHALL DEVELOP THE FULL STRENGTH OF THE WEAKER MEMBER. ALL WELDS SHALL BE MADE USING E70XX ,045 WIRE.

7.- SHOP CONNECTIONS SHALL BE WELDED UNLESS NOTED OTHERWISE. FIELD CONNECTIONS SHALL BE AS INDICATED ON THE DRAWINGS (IF REQUIRED). ALL FILLET WELDS SHALL BE A MINIMUM OF 3/16" UNLESS OTHERWISE NOTED. FIELD WELDS SHALL NOT BE ALLOWED.

8.- ALL HIGH STRENGTH BOLTS SHALL COMPLY WITH ASTM A325 TYPE 1 OR A490 TYPE 1. ALL NUTS SHALL COMPLY WITH ASTM A563DH, AND WASHERS SHALL COMPLY WITH ASTM F436.

9.- ALL HIGH STRENGTH BOLTS SHALL BE TIGHTENED TO A SNUG TIGHT CONDITION.

10.- ALL STAINLESS STEEL BOLTS SHALL COMPLY WITH ASTM F-593, ALLOY GROUP 1 OR 2 ALL NUTS SHALL COMPLY WITH ASTM F-594 ALLOY GROUP 1 OR 2.

11.- ALL STRUCTURAL STEEL SHALL BE PAINTED WITH ONE SHOP COAT (2.5 TO 3.5 MILS THICK MIN). THIS COAT IS A WEATHER RESISTANT POWDER COATING BASED ON POLYESTER TGIC (MANUFACTURED BY SHERWIN WILLIAMS OR TIGER DRYLAC). TO ACHIEVE OPTIMUM ADHESION, IT IS RECOMMENDED THAT THE PROPER TREATMENT AND DRYING TAKE PLACE BEFORE COATING. POLYESTER POWDER (TGIC) SPECIFICATIONS SHALL BE AS FOLLOWS:
- PENCIL HARDNESS (ASTM D-3363)
- HUMIDITY (ASTM D-2247)
- SOLVENT RESISTANCE (PCI METHOD) - 50 DBL RUBS SL. SOFTNES

FABRIC SPECIFICATION

1.- FABRIC SHALL BE A HIGH DENSITY POLYETHYLENE WITH ULTRA VIOLET ADDITIVES, WITH MONOFILAMENT AND TAPE CONSTRUCTION GIVING A STABLE MATERIAL AND RACHEL KNITTED TO ENSURE MATERIAL WILL NOT UNRAVEL IF CUT.

2.- FABRIC SPECIFICATIONS:	SOLID COLORS	STRIPE COLORS
- FADING	MINIMUM FADING AFTER 5 YEARS	
- LIFE EXPECTANCY	A MINIMUM OF 8 YEARS CONTINUOUS	
EXPOSURE TO THE SUN		

3.- FIRE TEST ON FABRIC: NFPA 701 TEST 2 AND ASTM E 84

4.- THREAD-PTFE (TEFLON) USED MEET THE FOLLOWING SPECIFICATIONS: HIGH STRENGTH, LOW SHRINKAGE, WIDE TEMPERATURE RANGE, FLEX & ABRASION RESISTANT AND UV RADIATION IMMUNITY. LOCKSTITCH - 1200 DENIER. CHAINSTITCH THREAD - 2400 DENIER.

AIRCRAFT CABLE

1.- WIRE ROPE CABLE SHALL BE 7x19 STRAND CORE GALVANIZED WIRE ROPE WITH A BREAKING STRENGTH VALUE OF 14.400 LBS (3/8" DIAMETER).

2.- CABLES SHALL BE FED THROUGH THE FABRIC SLEEVES AROUND THE PERIMETER OF THE CANOPY AND TENSIONED UNTIL THE FABRIC PANELS (DESIGNED PURPOSELY UNDERSIZED) REACH A TAUNT APPEARANCE. ANY LONG TERM CABLE SAG SHALL BE MINIMIZED DURING THE MAINTENANCE RE-TIGHTENING VISITS AS REQUIRED.

CODE ANALYSIS				
BUILDING	OCCUPANCY	CONSTRUCTION TYPE	AREA (SQF)	OCCUPANT LOAD
SHADE STRUCTURE TOTAL PROJECT	U	V-B	TBD	N/A

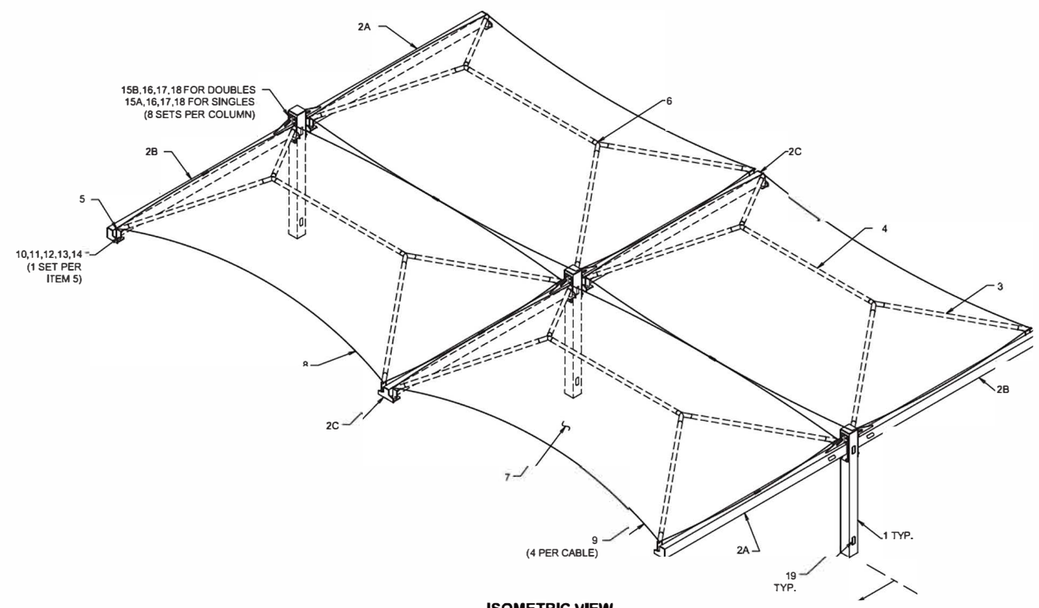

ISOMETRIC VIEW

THIS SIDE APPLIES FOR SINGLE STRUCTURES ONLY

LIST OF MATERIALS (PROJECT TOTALS)

ITEM	QTY.	DESCRIPTION	MATERIAL / DWG.	SMI PART No.
1	TBD	COLUMN (ELECTRICAL)	HSS 10.0 x 10.0 x 0.375	N/A
2A	TBD	RIGHT CANTILEVER BEAM (ELECTRICAL)	HSS 10.0 x 6.00 x 0.375	N/A
2B	TBD	LEFT CANTILEVER BEAM (ELECTRICAL)	HSS 10.0 x 6.00 x 0.375	N/A
2C	TBD	CENTER CANTILEVER BEAM (ELECTRICAL)	HSS 10.0 x 6.00 x 0.375	N/A
3	TBD	EXTENSION	4.0 GA 8 RD. TUBING	N/A
4	TBD	RIDGE (ELECTRICAL)	4.0 GA 8 RD. TUBING	N/A
5	TBD	RAFTER	4.0 GA 8 RD. TUBING	N/A
6	TBD	CROSSPIECE (ELECTRICAL)	4.0 GA 8 RD. TUBING	N/A
7	TBD	FABRIC TOP CANT	EXTREME 32	AREA & WEIGHT VARIES
8	TBD	3/8" STEEL CABLE	GALVANIZED	LENGTH VARIES
9	TBD	3/8" CABLE CLAMP	GALVANIZED	307629
10	TBD	Ø1/2"-13NC x 5" HEX BOLT	18-8 SS	307980
11	TBD	Ø1/2"-13NC HEX NUT	18-8 SS	307621
12	TBD	Ø1/2" FLAT WASHER	18-8 SS	307645
13	TBD	Ø1/2" FLAT WASHER	DELRIN (ACETAL)	308083
14	TBD	Ø1/2" SPLIT LOCK WASHER	18-8 SS	117028
15A	TBD	Ø3/4"-10NC x 13" HEX BOLT	ASTM A325 GALVANIZED	307984
15B	TBD	Ø3/4"-10NC x 14" HEX BOLT	ASTM A325 GALVANIZED	307985
16	TBD	Ø3/4"-10NC HEX NUT	ASTM A563 GALVANIZED	307687
17	TBD	Ø3/4" SPLIT LOCK WASHER	ASTM F436 GALVANIZED	307832
18	TBD	Ø3/4" FLAT WASHER	ASTM F436 GALVANIZED	307624
19	TBD	HANDHOLE COVER KIT	5" x 5" HANDHOLE COVER KIT	HHCOV KIT-55
20	TBD	ANCHOR ROD SET 1-1/4" x 36"	F1554 GR55	307615

THESE PLANS AND SPECIFICATIONS ARE THE PROPERTY OF USA SHADE AND FABRIC STRUCTURES AND SHALL NOT BE REPRODUCED WITHOUT THEIR WRITTEN PERMISSION.

CORPORATE HEADQUARTERS
8505-A CHANCELLOR ROW
DALLAS, TX, 75247
800-966-5005

CERTIFICATIONS:
IAS CERTIFICATION Noc FA-428
CLARK COUNTY MANUFACTURER CERTIFICATION NUMBER (NEVADA) 355

CUSTOMER: AUTONATION INC.

PROJECT NAME: HYUNDAI N. RICHLAND HILLS

LOCATION: NORTH RICHLAND HILLS TX

PROJECT NUMBER: 1002

STRUCTURE TYPE: SINGLE & DOUBLE JOINED HERITAGE CANTILEVERS

SIZE: VARIOUS

SCALE : AS NOTED

DRAWING SIZE: B

REV	DATE	DRW	CHK	ENG
NC	05/26/17	AK	JO	JO

RELEASE FOR CONSTRUCTION

Eng. By :	AK	05/26/17
Design By :	SA	05/26/17
Approved By :	SA	05/26/17

DRAWING DESCRIPTION: NOTES / LOM

DWG. 1002-1.0

PAGE 1000

REV. NC

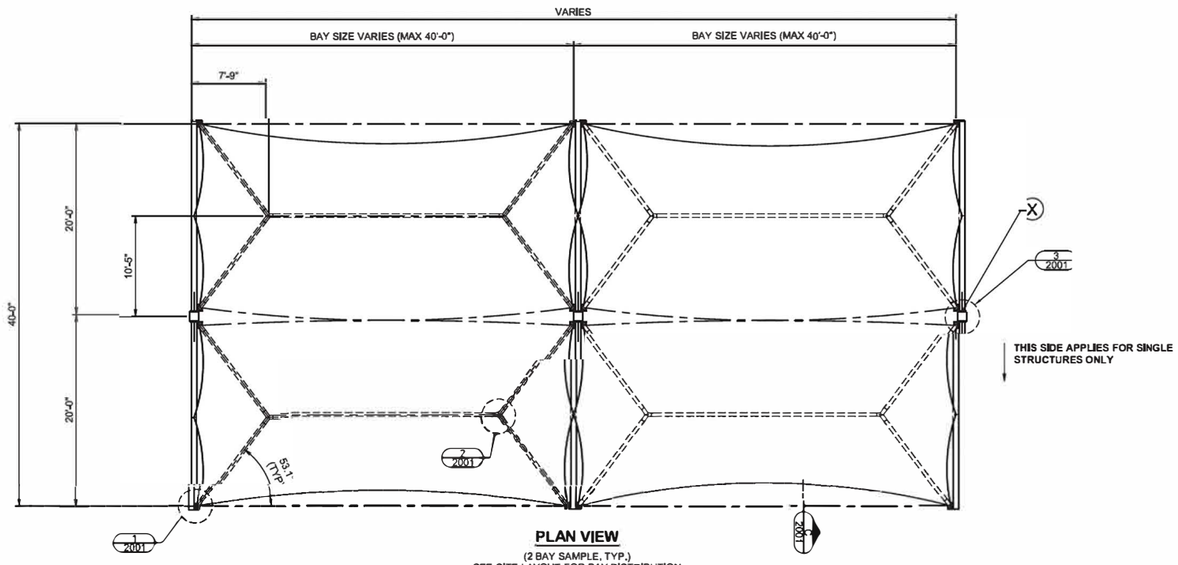

PLAN VIEW
(2 BAY SAMPLE, TYP.)
SEE SITE LAYOUT FOR BAY DISTRIBUTION

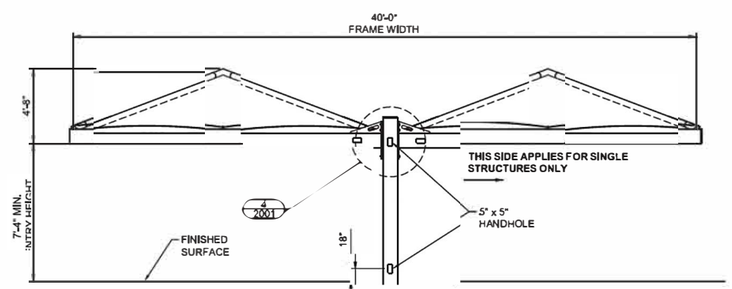

SIDE ELEVATION

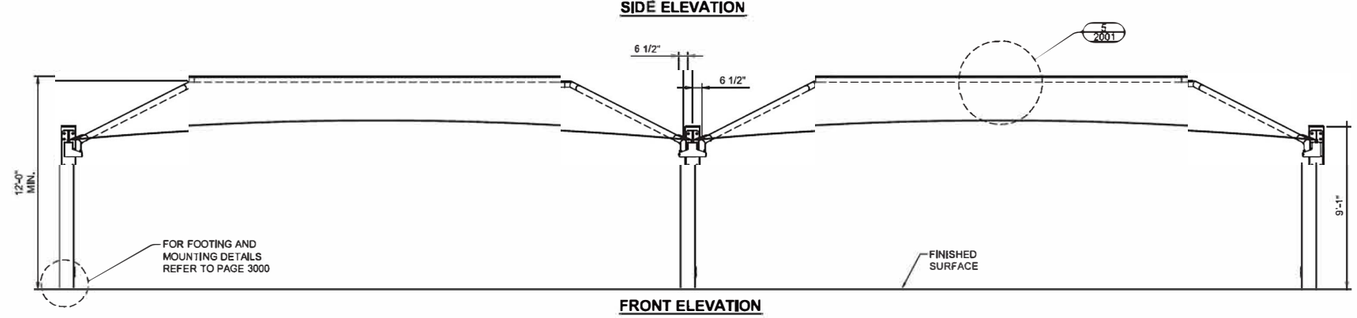

FRONT ELEVATION
(2 BAY SAMPLE, TYP.)
SEE SITE LAYOUT FOR BAY DISTRIBUTION

PLAN NORTH

FOR TRUE NORTH SEE CUSTOMER'S SITE PLAN

THESE PLANS AND SPECIFICATIONS ARE THE PROPERTY OF USA SHADE AND FABRIC STRUCTURES AND SHALL NOT BE REPRODUCED WITHOUT THEIR WRITTEN PERMISSION.

CORPORATE HEADQUARTERS
8505-A CHANCELLOR ROW
DALLAS, TX, 75247
800-966-5005

CERTIFICATIONS:
IAS CERTIFICATION No: FA-428
CLARK COUNTY MANUFACTURER CERTIFICATION NUMBER (NEVADA): 355

CUSTOMER: AUTONATION INC.

PROJECT NAME: HYUNDAI N. RICHLAND HILLS

LOCATION: NORTH RICHLAND HILLS TX

PROJECT NUMBER: 1002

STRUCTURE TYPE: SINGLE & DOUBLE JOINED HERITAGE CANTILEVERS

SIZE: VARIOUS

SCALE : AS NOTED

DRAWING SIZE: B

REV	DATE	DRW	CHK	ENG
NC	05/26/17	AK	JO	JO

RELEASE FOR CONSTRUCTION

Eng. By :	AK	05/26/17
Design By :	SA	05/26/17
Approved By :	SA	05/26/17

DRAWING DESCRIPTION: VIEWS & DETAILS

DWG. 1002-1.0

PAGE 2000

REV. NC